thanglongautomation.com - 0968.363.567

TOSHIBA

INDUSTRIAL INVERTER

E6580692 ②

TOSVERT VF-S7 SERIES

INSTRUCTION MANUAL

SAFETY PRECAUTIONS	1
GENERAL PRECAUTIONS	2
ACCEPTANCE INSPECTION AND PRECAUTION	3
EXTERNAL VIEW AND COMPONENT NAMES	4
INSTALLATION	5
CONNECTION OF MAIN CIRCUITS (POWER SUPPLY AND MOTOR)	6
CONNECTION OF CONTROL SIGNALS	9
CONTROL CIRCUIT TERMINAL FUNCTION LIST	11
OPERATION PANEL	13
PARAMETER SETTING	14
Setting the Acceleration and Deceleration Time	17
Increasing the Torque	17
Setting the Environmental Functions	18
Setting the Starting and Stopping Methods	20
Setting the Frequency Command Method	20
Connecting and Calibrating Meters	21
Resetting to the Default Values	22
Setting the Motor Protection Characteristics	22
Setting the Extended Parameters	23
Searching for Parameters Different from Default Values	23
OPERATIONS	24
• Operation with Built-in Potentiometer and RUN and STOP Keys	25
• Operation with Built-in Potentiometer and External Start Signal	25
• Setting the Frequency using External (Voltage/Current) Signal and Operating using an External Start Signal	26
• Setting the Frequency using Two External (Voltage/Current) Signals and Operating using an External Start Signal	27
• Selecting Preset Speed Frequencies, and Operating using an External Start Signal	28
MONITORING OPERATING CONDITIONS	29
PROTECTIVE FUNCTIONS	30
SPECIFICATIONS	34
EXTERNAL DIMENSIONS	36
PARAMETER LIST	42
MAINTENANCE AND INSPECTION	49
STORAGE AND WARRANTY	50
CE COMPLIANCE	51

NOTICE

1. Make sure that this Instruction Manual is delivered to the end user of the inverter unit.
2. Read this manual before installing or operating the inverter unit and store it in a safe place for reference.

SAFETY PRECAUTIONS

The inverter body and this instruction manual contain important descriptions and instructions for preventing injury to the user and other people and damage to property, and on how to use inverter safely and effectively. Carefully read and strictly observe these descriptions and instructions.

Symbols

DANGER : This symbol indicates that misoperation or not following the instruction could result in death or serious injury.

WARNING : This symbol indicates that misoperation or not following the instruction could result in bodily injury or physical damage.

PROHIBITED : This symbol indicates something which must not be done.

MANDATORY : This symbol indicates something which must be done.

HINT : This symbol indicates a useful and convenient function or method.

NOTICE : This symbol indicates something requiring attention during operation.

Restrictions on Use of Inverter

- Careful investigation should be made if the inverter is used for equipment which could cause death or bodily injury if the inverter malfunctions (such as a nuclear control system, aerospace system, traffic system, and safety devices and instruments). In such cases, please consult us.
- This product is manufactured under strict quality control. If using it for critical equipment, install safety devices on the equipment to prevent serious accidents or losses in case of an inverter failure, e.g., failure to output an error signal.
- Use the inverter only for general, industrial three-phase induction motors.

GENERAL PRECAUTIONS

DANGER

NEVER DISASSEMBLE

: Never disassemble, remodel or repair the product. Not following this instruction could cause electrocution, fire or injury. Ask your agent to repair the inverter.

: Never open the terminal block cover while power is supplied. The inverter contains high voltage inside. Not following this instruction could cause electrocution.

PROHIBITED

: Never put or insert any objects (cable scraps, rods, wires, etc.) into the inverter.

: Do not splash water or liquid onto the inverter.

: Always close the terminal block cover before turning on the power. Turning on the power without closing the terminal block cover could cause electrocution.

MANDATORY

: If the inverter produces smoke, odor or abnormal noises, turn off the input power immediately. Using the inverter in such a condition could result in a fire. Ask your agent to repair the inverter.

: Due to the possibility of contaminants entering the drive, disconnect the input power if the drive will be unused for extended periods. The leakage current caused by the contamination may result in fire.

WARNING

NEVER TOUCH

: Never touch the heat sink.
The heat sink become hot and could cause burns.

Precautions for Disposal

Pay attention to the following when disposing of the used inverter.

Explosion on incineration:	If the inverter is burnt in an incinerator, the electrolytic capacitors contained within may explode due to expansion of the electrolyte.
Plastic:	The plastics used for the covers, etc. may produce harmful or toxic gases when burnt. Be very careful when incinerating.
Disposal:	Dispose of the inverter as industrial waste.

ACCEPTANCE INSPECTION AND PRECAUTION

Before using the product, check that you have received the proper model of inverter. The product model is indicated in the position shown below. If an incorrect model has been supplied, contact the agent from whom you purchased it.

WARNING

MANDATORY : Use the proper type of inverter suitable for three-phase induction motors and power sources. Using an improper type of inverter will result in not only incorrect rotation of the three-phase induction motor but overheating, burning or other serious accidents.

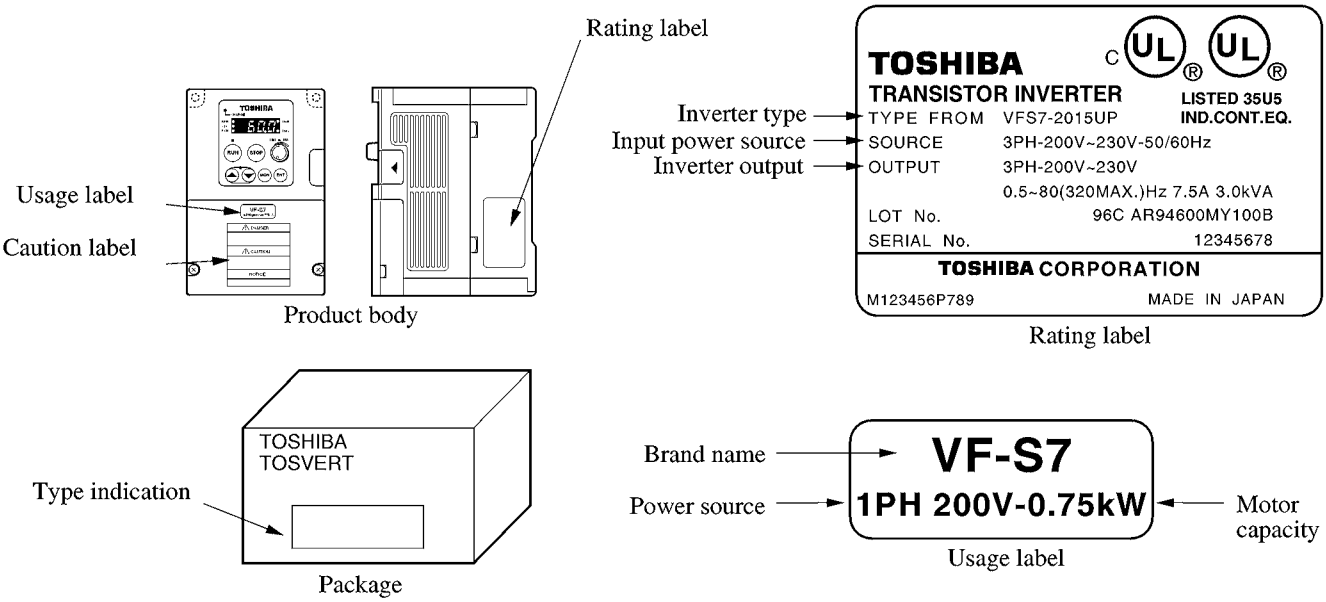

Applicable motor	Type		
	200 Vac Single phase	200 Vac Three phase	400 Vac Three phase
0.2kW	VFS7S-2002UP	–	–
0.4kW	VFS7S-2004UP	VFS7-2004UP	–
0.75kW	VFS7S-2007UP	VFS7-2007UP	VFS7-4007UPL
1.5kW	VFS7S-2015UP	VFS7-2015UP	VFS7-4015UPL
2.2kW	VFS7S-2022UP	VFS7-2022UP	VFS7-4022UPL
3.7kW	–	VFS7-2037UPL	VFS7-4037UPL
5.5kW	–	VFS7-2055UPLH	VFS7-4055UPLH
7.5kW	–	VFS7-2075UPLH	VFS7-4075UPLH
11kW	–	–	VFS7-4110UPLH
15kW	–	–	VFS7-4150UPLH

EXTERNAL VIEW AND COMPONENT NAMES

ECN lamp: When lit, the system is running in the economy (energy saving) mode.

VEC lamp: When lit. the system is running in the vector operation control mode.

RUN lamp: When lit, the inverter is running.

CHARGE lamp: This Lamp indicates that the internal circuits of the inverter are charged with high voltages. When lit, do not open the terminal block cover.

RUN key lamp: When lit, the RUN key can be used.

Display unit: The operation frequency, parameters, error causes, etc. are displayed on this unit.

RUN key: To start operation, press this key while the RUN key lamp is on.

MON lamp: When lit, the display unit is in monitor mode.

STOP key: Press this key to stop operation.

PRG lamp: When lit, the display unit is in parameter setting mode.

UP and DOWN keys: Press these keys to increase or decrease the frequency during operation.

Communication port cover: Remove the cover when remote panel or communication option (RS-232C, RS485) cable is connected.

Built-in potentiometer lamp: When lit, the operation frequency can be set with the built-in potentiometer.

UP key

DOWN key

Built-in potentiometer: When the potentiometer lamp is lit, the operation frequency can be set with this potentiometer.

Braking resistor terminal block

DCL terminal block

Main circuit terminal block

ENT (enter) key

MON (monitor) key

Control terminal block

Terminal block cover: The cover of the main circuit terminal block. Be sure to close this cover before starting operation to prevent anyone from touching the terminal block by mistake.

Heatsink

Rating label

Terminal block cover set screw

Front view

Side view

INSTALLATION

DANGER

PROHIBITED : Never install the inverter in a place exposed to inflammables, combustible gases or dust, as this could cause a fire.

MANDATORY : Install the inverter on a nonflammable metal object. Installation on an inflammable object could cause a fire since the rear panel of the inverter becomes hot.

: Use an emergency stop device such as a mechanical brake suitable to the system. Operation cannot be stopped immediately by the inverter alone, thus risking an accident or injury.

WARNING

MANDATORY : Use the inverter under the environmental conditions specified in the instruction manual, otherwise malfunctions or troubles could result.

: Install the inverter on a base which can hold the inverter weight, otherwise the inverter could fall and cause injury.

: Use a mechanical brake when braking (i.e., holding the motor shaft) is needed. The motor shaft cannot be held by the braking function of the inverter alone, risking an accident or injury.

: Install the inverter on a metal panel or another nonflammable object. If it is to be installed on a heat insulating panel, install it on a metal panel (50 cm square or more in size), then install the metal panel on the heat insulating panel.

Install the inverter in the following conditions.

Location: Indoors on a metal surface

Orientation: Vertical

Environmental conditions

Temperature: -10 to 40°C
-10 to 50°C
(Remove the seal from the vent hole in the upper part of the inverter.)

Humidity: 93% RH or less, no condensation

Vibration: 5.9 m/s² or less (10 to 55 Hz)

Others: Free from combustible gases, particles, dust, corrosive gases, grinding oil and cutting oil

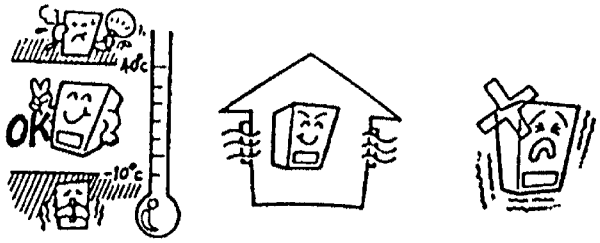

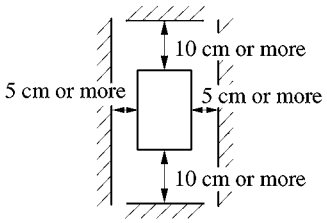

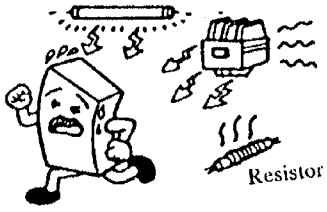

Leave space around the inverter as shown in the figure.

Solenoid: Connect a surge arrester to the coil.

Brake: Connect a surge arrester to the coil.

Electromagnetic contactor: Connect a surge arrester to the coil.

Fluorescent lamp: Connect a surge arresster to the coil.

Resistor: Use in a distant place from the inverter.

CONNECTION OF MAIN CIRCUITS (POWER SUPPLY AND MOTOR)

This section describes how to connect the power supply, motor, alternating current reactor ACL (optional) and direct current reactor DCL.

DANGER

MANDATORY

: Entrust all electrical work to a specialist. Wiring connected by an inexperienced person could cause a fire or electrocution.

: Connect the wires to the motor terminals of the proper phases. If the wires are connected to the incorrect phases, the motor may rotate in the wrong direction, causing injury.

: Before starting wiring work, be sure to turn off the power. Wait for at least ten minutes, and make sure that the CHARGE lamp is off. If wiring is done before confirming that the CHARGE lamp is off, electrocution could result.

: On completion of wiring, close the terminal block cover; bare terminals could cause electrocution.

: Connect the wires in order, not to let any adjacent terminals touch using crimp style terminals with sleeves. Take care not to let wires touch each other, which could result in a fire.

: Be sure to connect the G/E terminal to the ground. Otherwise, a damaged unit or electric leakage could cause electrocution or a fire.

PROHIBITED

: Charged capacitors can present a shock hazard even after source power is removed. Drives with EMI filters will retain a charge on the input terminals for up to 10 minutes after the power has been removed. To avoid electrical shock, do not touch the connector terminals and uninsulated source cables at either the main circuit disconnect or the drive until the capacitive charge has dissipated.

WARNING

MANDATORY

: Equip the solenoid valves, brakes and electromagnetic contactors around the inverter with surge arresters. Otherwise, noise produced by them could make the inverter malfunction, resulting in problem or injury due to unexpected movement.

PROHIBITED

: Do not connect any device having a capacitor (such as a noise filter, surge arrester or the like) to the output terminals of the inverter (to be connected with a motor). Connection of such a device could result in a fire.

: Do not use three phase input unit to single phase power source, otherwise the inverter could be damaged.

NOTICE

- If the wire length exceeds 30 meters, use a wire with a higher current rating than the recommended wire.

HINT

- If there is a radio near the inverter and noise can be heard from it, connect a radio noise filter to the inverter.

(1) Remove the terminal block cover set screws, and open the terminal block cover.

(2) Connect wires to the terminal blocks of the main circuit, ACL (optional), DCL (optional) and braking resistor as shown on page 7.

(3) Close the terminal block cover, then tighten the screws.

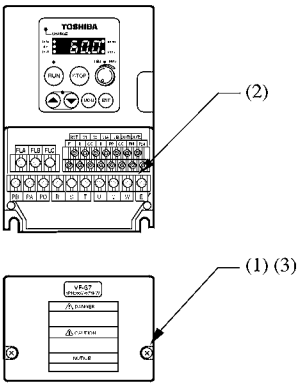

Wiring Diagram of Main Circuit Terminal Block

NOTICE

When using the DCL, disconnect the shorting bar from the PO and PA.

*Connect single phase power supply to terminal "R/L1" and "T/L3".

VFS7S-2002UP~2022UP
VFS7-2004UP~2022UP

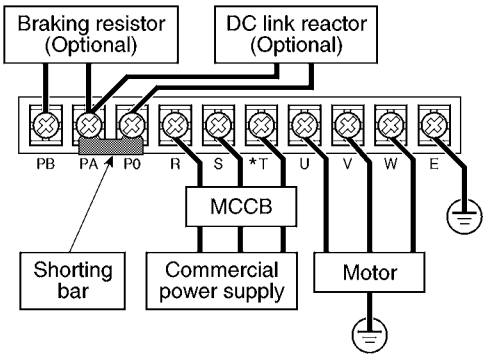

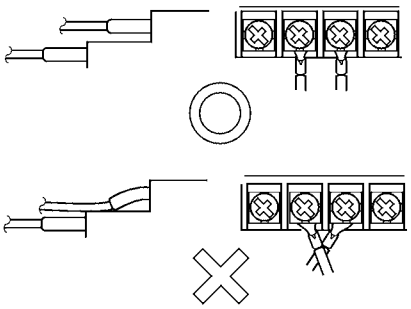

VFS7-2037UPL/4015UPL/4022UPL/4037UPL

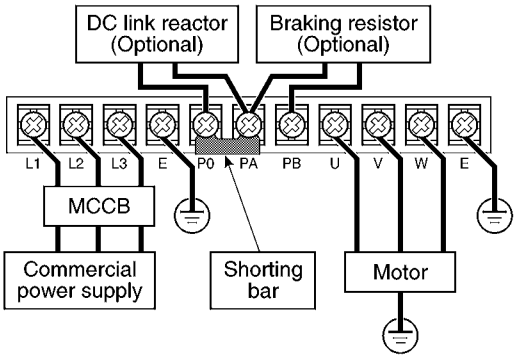

VFS7-2055UPLH/2075UPLH/4055UPLH/4075UPLH

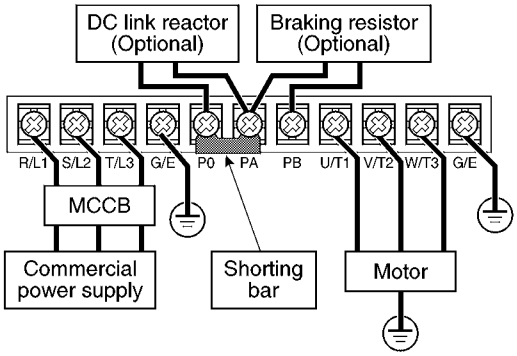

VFS7-4110UPLH/4150UPLH

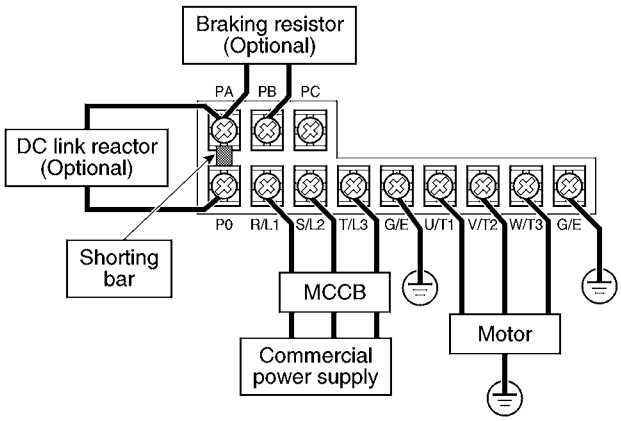

Inverter rated power (kW)	200V Class		400V Class	
	Standard resistor	min. allowable resistance value	Standard resistor	min. allowable resistance value
0.2	200Ω	70Ω	–	–
0.4	200Ω	70Ω	–	–
0.75	200Ω	70Ω	200Ω	100Ω
1.5	75Ω	35Ω	200Ω	100Ω
2.2	75Ω	35Ω	200Ω	70Ω
3.7	40Ω	20Ω	160Ω	40Ω
5.5	20Ω	16.5Ω	60Ω	40Ω
7.5	15Ω	15Ω	60Ω	40Ω
11	10Ω	10Ω	40Ω	40Ω
15	7.5Ω	7.5Ω	30Ω	30Ω

Recommended Cables According to Device Ratings

Power source	Applicable motor	Inverter type	Power cable size	Grounding cable size	Rated current (Non fuse breaker)	TOSHIBA model (Non fuse breaker)
Single phase 200 V	0.2kW	VFS7S-2002UP	2.0mm^2	3.5mm^2	10A	SS30 (2P)
	0.4kW	VFS7S-2004UP	2.0mm^2	3.5mm^2	15A	SS30 (2P)
	0.75kW	VFS7S-2007UP	2.0mm^2	3.5mm^2	20A	SS30 (2P)
	1.5kW	VFS7S-2015UP	3.5mm^2	3.5mm^2	30A	SS30 (2P)
	2.2kW	VFS7S-2022UP	5.5mm^2	5.5mm^2	40A	SS50 (2P)
Three phase 200V	0.4kW	VFS7-2004UP	2.0mm^2	3.5mm^2	5A	SS30 (3P)
	0.75kW	VFS7-2007UP	2.0mm^2	3.5mm^2	10A	SS30 (3P)
	1.5kW	VFS7-2015UP	2.0mm^2	3.5mm^2	15A	SS30 (3P)
	2.2kW	VFS7-2022UP	2.0mm^2	3.5mm^2	20A	SS30 (3P)
	3.7kW	VFS7-2037UPL	3.5mm^2	3.5mm^2	30A	SS30 (3P)
	5.5kW	VFS7-2055UPLH	8.0mm^2	8.0mm^2	50A	ES50 (3P)
	7.5kW	VFS7-2075UPLH	14mm^2	14mm^2	60A	EH100 (3P)
Three phase 400V	0.75kW	VFS7-4007UPL	2mm^2	3.5mm^2	5A	SS30 (3P)
	1.5kW	VFS7-4015UPL	2mm^2	3.5mm^2	10A	SS30 (3P)
	2.2kW	VFS7-4022UPL	2mm^2	3.5mm^2	10A	SS30 (3P)
	3.7kW	VFS7-4037UPL	2mm^2	3.5mm^2	15A	SS30 (3P)
	5.5kW	VFS7-4055UPLH	3.5mm^2	3.5mm^2	30A	SS30 (3P)
	7.5kW	VFS7-4075UPLH	5.5mm^2	5.5mm^2	30A	SS30 (3P)
	11kW	VFS7-4110UPLH	8.0mm^2	8.0mm^2	50A	ES50 (3P)
	15kW	VFS7-4150UPLH	8.0mm^2	8.0mm^2	60A	EH100 (3P)

CONNECTION OF CONTROL SIGNALS

DANGER

MANDATORY : Turn off the power before starting wiring. Otherwise, the motor could begin to rotate suddenly due to improper wiring or operation, resulting in injury.

WARNING

MANDATORY : Route the control wires and main circuit wires apart from each other. Otherwise, noise produced by the main circuit wires could make the motor malfunction, resulting in injury.

: Connect the control wires carefully and do not let them touch the adjacent terminals. If a control wire touches an adjacent terminal, the motor could malfunction, resulting in injury.

HINT

- The function of control terminal block can be selected from a menu of functions using parameters.
- The control wires need not be connected if operation is to be controlled using the built-in potentiometer and RUN and STOP keys only.

(1) Remove the terminal block cover set screws, and open the terminal block cover.
(2) See page 11, and connect the necessary control wires.
(3) See page 11, and connect the inverter error output wires if necessary.
(4) Close the terminal block cover, then tighten the screws.

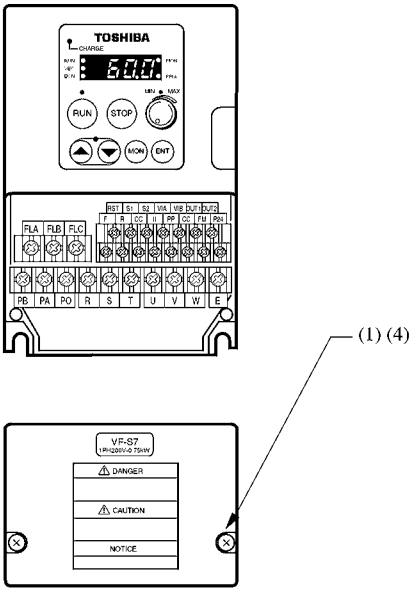

Examples of Typical Control Wire Connections

WARNING

MANDATORY ! : The voltage command input VIA and current command input II are not independent of each other. Only one may be used. If a command is input to both, the signal cannot be read properly and the motor could malfunction resulting in injury.

NOTICE

If the 4 to 20 mA current command is used for frequency setting, set 20 to F201:

Frequency setting: Built-in potentiometer
Start and stop: External signals

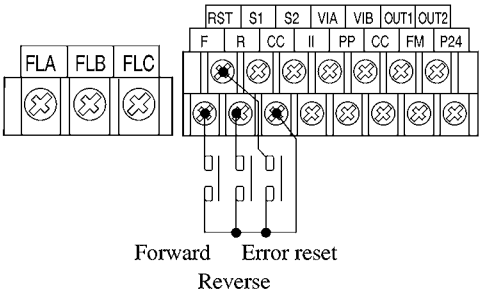

Frequency setting: External potentiometer
Start and stop: External signals

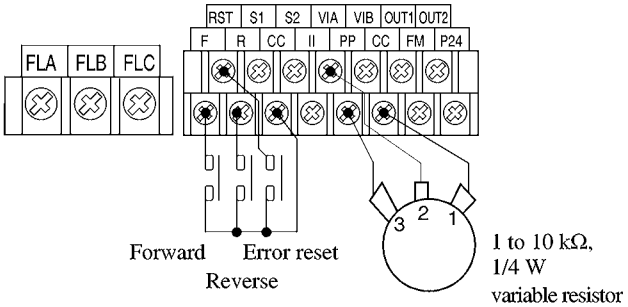

Frequency setting: External signal (0 to 10 V voltage signal)
Start and stop: External signals

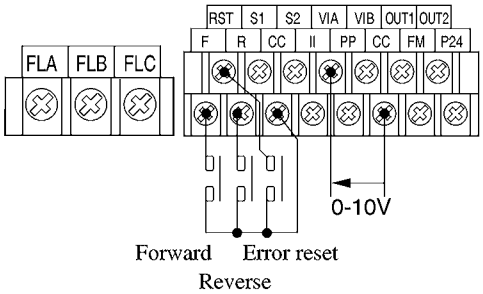

Frequency setting: External signal (4 to 20 mA current signal)
Start and stop: External signals

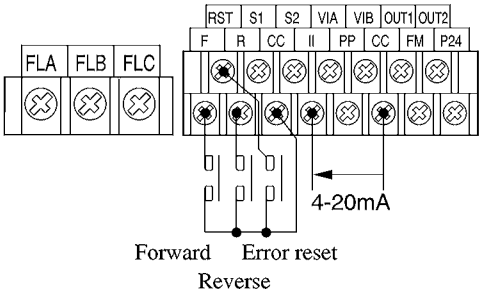

Remote/local operation selection
Frequency setting: Remote: External signal (0 to 10 V voltage or 4 to 20 mA current signal)
Local: External potentiometer
Start and stop: External signals

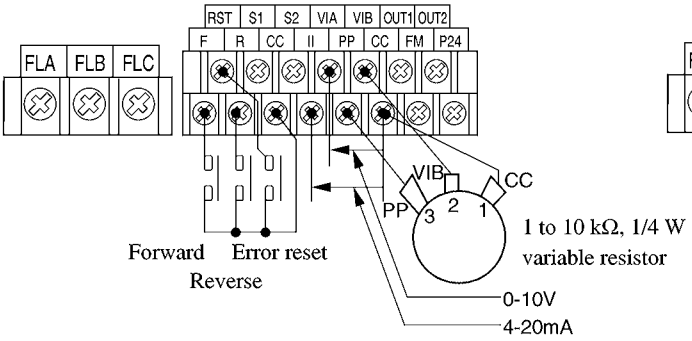

Frequency setting: Three preset speed selection
Start and stop: External signals

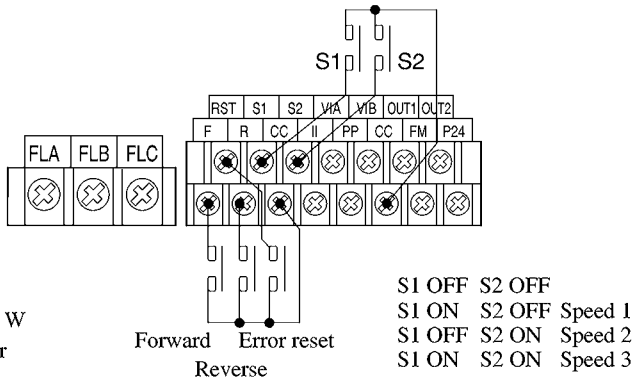

S1 OFF S2 OFF
S1 ON S2 OFF Speed 1
S1 OFF S2 ON Speed 2
S1 ON S2 ON Speed 3

CONTROL CIRCUIT TERMINAL FUNCTION LIST

Terminal block name	I/O	Function	Electric rating	Inverter internal circuit
F	I	Motor rotates forward when the F terminal is connected with the CC terminal by default.	24 Vdc, 10 mA dry contact input	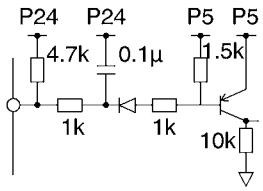
R	I	Motor rotates in reverse when the R terminal is connected with the CC terminal by default. Motor rotates in reverse when F and R terminals are connected simultaneously with the CC terminal.	24 Vdc, 10 mA dry contact input	
S1	I	Control input signal. By default, preset speed operation is selected when the S1 terminal is connected with the CC terminal.	24 Vdc, 10 mA dry contact input	
S2	I	Control input signal. By default, preset speed operation is selected when the S2 terminal is connected with the CC terminal.	24 Vdc, 10 mA non-voltage contact input	
RST	I	Error output signal is reset when the RST terminal is connected with the CC terminal by default.	24 Vdc, 10 mA non-voltage contact input	
CC	Common	Control common signal (not connected to the fault output). Both CC terminals are connected together.		
FM	O	Analog meter terminal: Output frequency of output current can be measured. Output frequency is selected by default.	1 mA full scale DC ammeter or 7.5 Vdc, 1 mA DC voltmeter	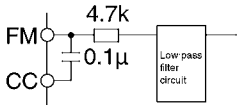
OUT1	O	Control output signal. The low speed signal is selected by default. (Connects to the CC terminal when the operation frequency exceeds *F100* frequency.)	24 Vdc, 50 mA open collector output maximum	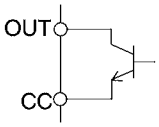
OUT2	O	Control output signal. The speed-reached signal is selected by default. (Connects to the CC terminal when the operation frequency reaches *F101* frequency.)	24 Vdc, 50 mA open collector output maximum	
CC	Common	Control common signal (not connected to the fault output). Both CC terminals are connected together.		
II	I	Current frequency command. Used to specify the frequency by issuing a current signal from user's controller. Cannot be used with the VIA signal.	4 to 20 mA (Input impedance: 400 Ω)	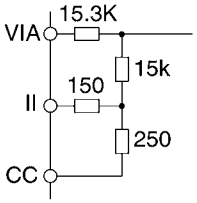
VIA	I	Voltage frequency command. Used to specify the frequency by issuing a voltage signal from the user's controller. Cannot be used with the II signal.	0 to 10 V (Input impedance: 30.55 kΩ)	

Terminal block name	I/O	Function	Electric rating	Inverter internal circuit
VIB	I	Voltage frequency command. Used to specify the frequency by issuing a voltage signal from the user's controller.	0 to 10 V (Input impedance: 30 k Ω)	VIB, 15k, 15k, CC
PP	O	Power supply for the external potentiometer.	10 Vdc (Connect-able potentiometer: 1k to 10 k Ω, 1/4 W)	PP, 940, 24V
P24	O	Power supply for the external relay.	24 Vdc, 100 mA	P24, 24V
FLA	O	Fault latch output. Connected with the FLC terminal if an error occurs by default.	250 Vac, 2 A	FLB, FLA, FLC
FLB	O	Fault latch output. Connected with the FLC terminal in the normal condition by default.	30 Vdc, 2 A resistive load	
FLC	O	Fault latch output. A common terminal for FLA and FLB by default.	30 Vdc, 1.5 A inductive load	

OPERATION PANEL

The following conditions are displayed on the operation panel.

1) Frequency, 2) parameter display or changes, and 3) inverter condition during operation or in case of an error

Keys

MON key : Selects 1), 2) and 3) in this order. Pressing the MON key displays the first item of the following mode. In the parameter display or change mode, "AU1" is displayed. In the inverter condition display mode, "Fr-F"or "Fr-r" is displayed.

ENT key : Selects the displayed item or stores it in the inverter.

UP key : Displays the next item or increases a numeric value.

DOWN key : Displays the previous item or decreases a numeric value.

Display Unit

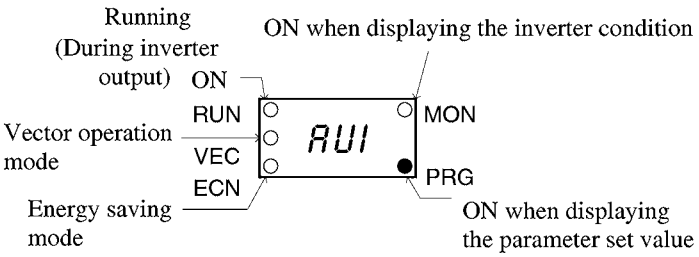

Mode 1): The operation frequency is displayed, or error contents are displayed when an error is displayed.

Mode 2): A parameter name or parameter set value is displayed.

Mode 3): The inverter condition is displayed.

Usage

2) Parameter display/setting

3) Inverter condition display

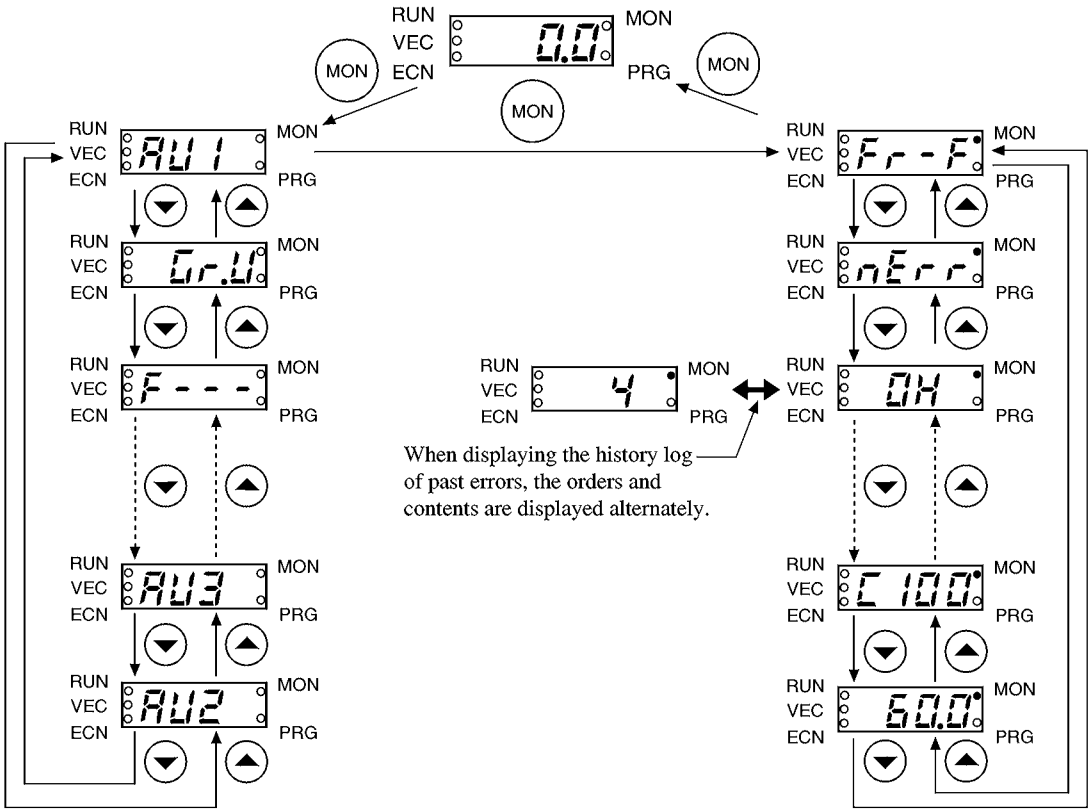

PARAMETER SETTING

There are three parameter groups as shown below.

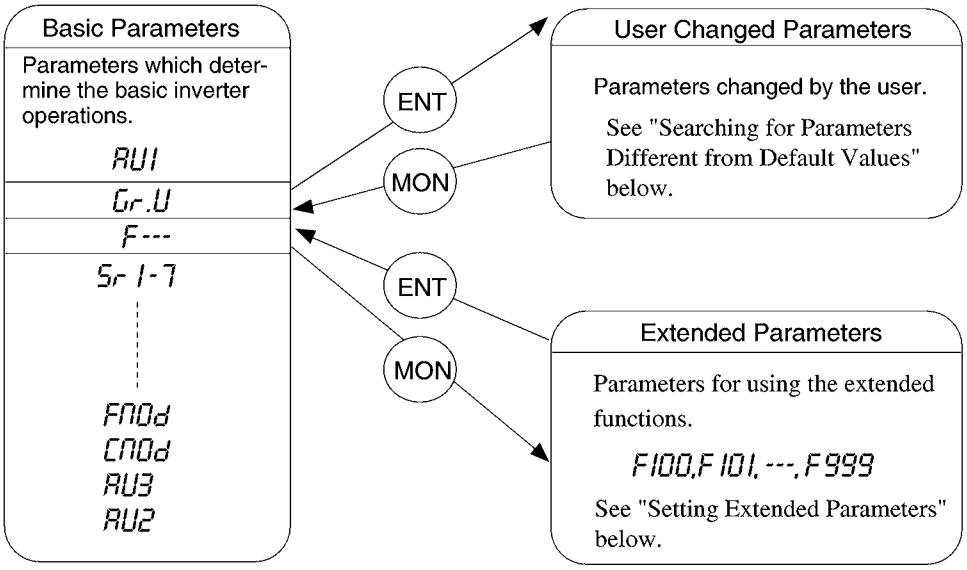

HINT

- If you become confused during operation, press the MON key several times to return to the frequency display.
- The VF-S7 has three convenient automatic operation functions (automatic acceleration and deceleration, automatic torque boost, and automatic environment setting). In the following operation, parameters do not need to be set. (These functions may not work properly for some load conditions.)

  Acceleration and deceleration time: Automatic
  Torque boost: Automatic torque boost or vector operation control
  Environment setting: Motor base/maximum frequency 50/60 Hz selection
- Displays for operations

  This manual uses the symbols shown below to indicate the LED displays and panel key operations.

  LED display (Numeric values)

0	1	2	3	4	5	6	7	8	9	-
0	1	2	3	4	5	6	7	8	9	-

LED display (Characters)

Aa	Bb	Cc	Dd	Ee	Ff	Gg	Hh	I i	J j	K k
A	b	C	d	E	F	G	Hh	I	J	

Ll	Mm	Nn	Oo	Pp	Qq	Rr	Ss	Tt	Uu	Vv
L	M	n	Oo	P	q	r	S	t	U	u

Ww	Xx	Yy	Zz
		y	

Panel keys

MON , etc. (The panel key symbols are enclosed in circles.)

KEY OPERATIONS

WARNING

MANDATORY ! : Parameter settings are accepted and fed back to the motor operation even while the motor is running. When you change the parameter settings during operation, pay attention to how the motor is running.

Example of Parameter Selection with ▲ and ▼ Keys

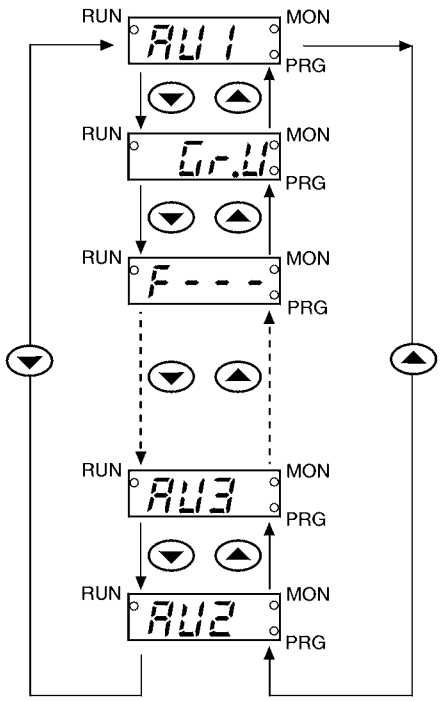

Checking Parameter Set Values

Parameter selection

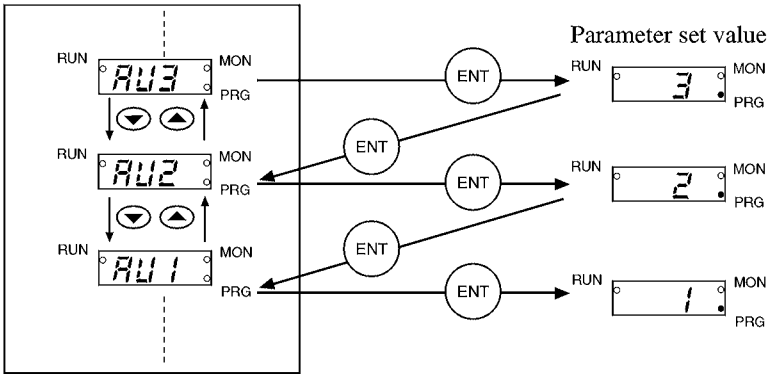

Changing a Parameter

Parameter selection

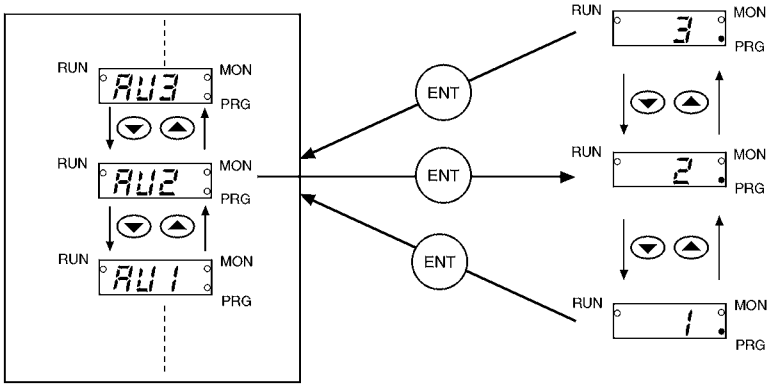

※There are some parameters cannot be changed while running. See parameter list.
Parameter values may be changed incorrectly when you turn off the power or reset an error during parameter-setting.

(1) Turn on the power.

(2) Press the (MON) key until *RUI* is displayed on the display unit.

(3) Select the desired parameter name from the parameter list. Press the (▼) or (▲) key until the parameter name is displayed.

(4) When the desired parameter name is displayed, press the (ENT) key. The parameter set value is displayed.

(5) To change the parameter set value, press the (▼) or (▲) key.

(6) To store the displayed parameter set value in the inverter, press the (ENT) key. The parameter name and changed set value are displayed alternately, then the parameter name is displayed.

(7) To set another parameter, carry out the same sequence from step (3).

(8) To finish parameter setting, press the (MON) key twice. The current frequency is displayed.

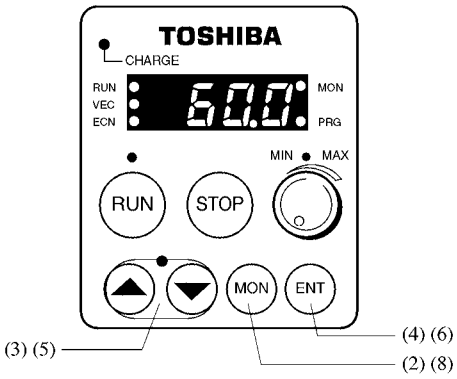

SETTING THE ACCELERATION AND DECELERATION TIME

Applicable parameters: Automatic acceleration and deceleration AUI, acceleration time ACC, and deceleration time dEC

There are two methods of setting the acceleration and deceleration time: Automatic setting of the acceleration and deceleration time by the inverter, and manual setting.

- Automatic acceleration and deceleration time setting

  To select automatic acceleration and deceleration time setting, set the AUI value to "1".

HINT

When automatic acceleration and deceleration time setting is selected, the acceleration and deceleration time is always varied according to the load conditions. If the machine requires a predetermined acceleration and deceleration time, use the manual acceleration and deceleration time setting function.

- Manual acceleration and deceleration time setting

  Set the AUI value to "0". Then, set the ACC and dEC values to the desired acceleration time and deceleration time, respectively.

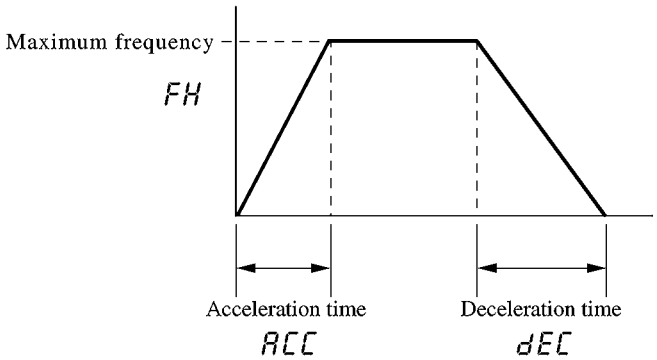

INCREASING TORQUE

Applicable parameters: Automatic torque boost AU2 and torque boost ub

The motor torque can be increased by raising the inverter output voltage.

There are two methods of raising the output voltage, automatic voltage raising by the inverter and manual voltage raising.

NOTICE

If the output voltage of the inverter is increased excessively, the inverter may stop due to overcurrent or, in the worst case, the inverter and/or motor may be damaged.

- Automatic torque boost and improving the speed accuracy

  Set the AU2 value to "1". The torque is automatically increased. To increase the torque and improve the speed accuracy, set the AU2 value to "3". If operation is not stable when AU2 is set to "2" or "3", set AU2 to "1", and the operation will become stable.

- Increasing inverter output voltage manually

  Set the AU2 value to "0" and increase the ub value. Use a value between 3 and 8 for a normal motor.

SETTING THE ENVIRONMENTAL FUNCTIONS (MAXIMUM FREQUENCY, UPPER AND LOWER LIMITS, BASE FREQUENCY, ETC.)

Applicable parameters: Automatic environment setting AU3, upper limit frequency UL, maximum frequency FH, lower limit frequency LL, and base frequency uL (VIA/II input point 2 frequency F204, auto-restart F301, regeneration power ride-through control F302, pattern of acceleration and deceleration F502, output voltage adjustment F306, power voltage compensation F307, and VIB point 2 frequency F213)

The inverter has various functions for setting the environment to ensure trouble-free operation. These functions can be selected in two ways, automatic selection by the inverter, and manual selection.

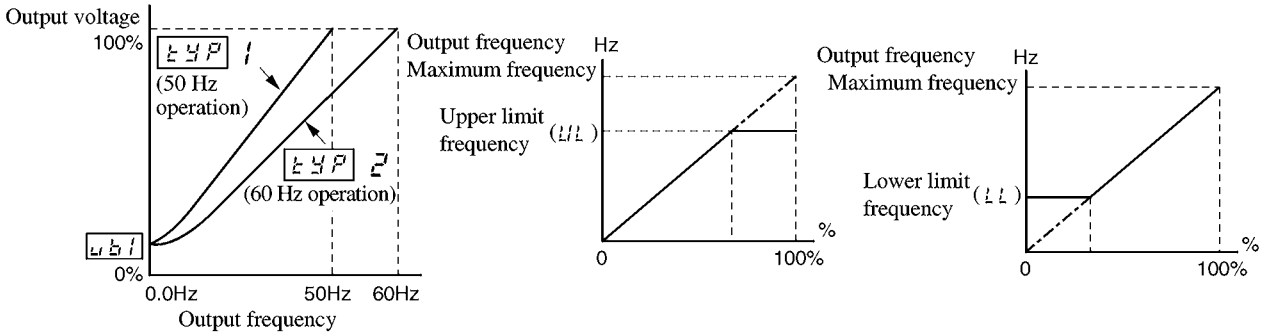

● Automatic inverter environment setting

WARNING

MANDATORY ! : Select a suitable source voltage for the motor. Improper voltage selection could result in rotation failure or, in the worst case, the motor could be damaged.

NOTICE

● The automatic inverter environment setting sets the motor revolution lower than the frequency command automatically in case of an instantaneous power failure. If this operation has an adverse influence on the machine, set the environment manually.

HINT

● If the frequency of the command is higher than the upper limit, the motor is run at the upper limit frequency. If the frequency of the command is lower than the lower limit, the motor is run at the lower limit frequency.
When the motor starts, the inverter output frequency does not jump to the lower limit frequency, but accelerates from 0 Hz according to the acceleration setting. Also, when the running motor stops, the inverter output frequency does not jump from the lower limit frequency to 0 Hz, but decelerates to 0 Hz according to the deceleration setting.

The set values differ with the source voltage rating of the motor as shown below:

50 Hz motor: Set AU3 to "1".

60 Hz motor: Set AU3 to "2".

The automatic environment settings are as shown on the following page.

Parameter	Description	When AU3 is set to "1"	When AU3 is set to "2"
Maximum frequency: FH	Maximum output frequency of the inverter	50 Hz	60 Hz
Upper limit frequency: UL	Upper limit frequency of the inverter	50 Hz	60 Hz
Base frequency: uL	Rated frequency of the motor	50 Hz	60 Hz
Frequency at VIA/II input point 2: F204	Output frequency when a 10 V voltage command is input	50 Hz	60 Hz
Frequency at VIB input point 2: F213	Output frequency when a 10 V voltage command is input	50 Hz	60 Hz
Auto restart: F301	Operation restarts according to the motor speed automatically if F-CC is ON when the power is recovered from instantaneous power failure.	1: Instantaneous power failure restart control is effective.	Same as left
Regeneration power ride through control: F302	In case of an instantaneous power failure, the motor speed is reduced automatically to continue operation.	1: Instantaneous power failure non-stop control is effective.	Same as left
Source voltage compensation: F307	Control is performed so that the output voltage does not lower when the source voltage drops.	1: Source voltage compensation is effective.	Same as left
Pattern of acceleration and deceleration: F502	An S pattern is used to accelerate and decelerate the motor speed.	1: S pattern	Same as left

● Manual inverter environment setting

HINT

Set the maximum frequency to 80 Hz if the motor is a general-purpose motor not designed for inverter-driven high-speed operation.

Set AU3 to "0", then set the parameters individually.

SETTING THE STARTING AND STOPPING METHODS

Applicable parameter: Command mode selection CMOd

There are two starting and stopping methods as shown below. Select either method.

Starting and stopping method	Set value	
Terminal block	0	The motor starts when the F (forward) or R (reverse) terminal on the terminal block is connected to CC. The motor speed increases according to the acceleration pattern, and decreases according to the deceleration pattern and the motor stops.
RUN / STOP key	1	When the RUN key on the panel is pressed, the motor is accelerated according to the acceleration pattern. When the STOP key is pressed, the motor is decelerated according to the deceleration pattern.

SETTING THE FREQUENCY COMMAND METHOD

Applicable parameter: Frequency setting mode selection FMOd

There are three methods of setting the frequency. Select a suitable method.

Frequency setting method	Set value	
Terminal block 0-10V, 4-20mA External potenti-ometer	0	A command input to VIA, VIB or II on the terminal block is read. Select the terminal block to use the external potentiometer or to issue a voltage command (0 to 10 V) or current command (4 to 20 mA) from the user's controller.
▲ / ▼ key	1	The frequency set with the ▲ or ▼ key on the panel is read. To memorize the setting frequency, press ENT key after the frequency is changed. The UP/DOWN key lamp is on when the panel is selected.
Built-in potenti-ometer	2	The value set with the built-in potentiometer is read. The built-in potentiometer lamp is on when the built-in potentiometer is selected.

Use the parameter F200 to specify the order of priority of two frequency commands to be input to the terminal block.

Settings of frequency priority parameter F200	Prior terminals	
0	VIA or I I	A command input to the VIA or II terminal is valid. If 0 is input to the VIA and II terminals, a command input to the VIB terminal is valid.
1	VIB	A command input to the VIB terminal is valid. If 0 is input to the VIB terminals, a command input to the VIA or II terminal is valid.

CONNECTING AND CALIBRATING METERS

Applicable parameters: FM terminal function selection FMSL, meter adjustment FM

An analog meter can be connected to the FM terminal to act as a frequency meter or an output current meter.

HINT

- The frequency output means the inverter output frequency, and does not mean the actual motor speed.
- The FM terminal output signal has an error of ±3%. It cannot be used to control (or protect) an important external instrument.

- How to connect a meter to measure frequency

  Set the FMSL value to "0". It is set to "0" by default.

- How to connect a meter to measure ouput current
  Set the FMSL value to "1".
  When measuring output current, use a meter whose full scale rating (1mA or 7.5V) is equivalent to 2.25 times the rated inverter current.

- How to calibrate the frequency meter or ammeter
  (1) Start the inverter. When an ammeter is to be adjusted, connect the motor. (See "OPERATIONS" .)
  (2) Increase the frequency within the safe range.
  (3) Press the MON key to display RUI.
  (4) Press the ▲ key six times to display FM.
  (5) Press the ENT key.
  (6) The operation frequency or current (%) is displayed on the display.
  (7) Adjust the reading of the analog meter to the displayed frequency or current with the ▲ or ▼ key.
  (8) After completing the adjustment, press the ENT key.
  (9) Press the MON key twice. The current frequency is displayed.
  (10) Stop the inverter.

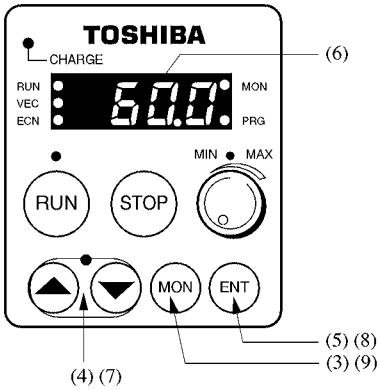

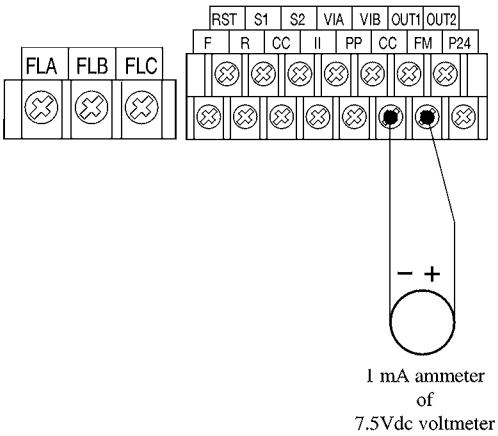

RESETTING TO THE DEFAULT VALUES

Applicable parameter: Standard setting mode selection EYP

All parameters can be reset to the default values when set to "3". If the 50 Hz or 60 Hz setting is selected, FH, UL, uL, F204, F213 are set for 50 Hz or 60 Hz.

This parameter EYP cannot be changed while running, so always set after the motor has stopped.

HINT

- When this parameter is selected, the previous set value is displayed at the left end and "0" is always displayed at the right end. The previous set value is "3" by default.
- Parameters different from the default values can be checked using the user parameter group Gr.U.

Setting	Set value
Not changed	0
Parameter setting for 50 Hz motor	1
Parameter setting for 60 Hz motor	2
Default setting (All parameters)	3
Clearing error logs	4
Clearing accumulative time ※	5
Initialize inverter typeform ※	6

※ Accumulative time is cumulative run time for which the inverter output frequency is more than 0.0Hz and unit is 100hours.

※ EYP6 is used to clear an EEYP error that may occur when the control PCB is installed in a different inverter unit and to reset the typeform to that of the new inverter.

SETTING THE MOTOR PROTECTION CHARACTERISTICS

Applicable parameter: Selection of electric thermal protection characteristics OLn

The "thermal protection type" can be specified according to the motor type. Normally select "0" for the standard type motor or "4" for a VF motor for the inverter.

DANGER

MANDATORY

: Be sure to set the electric thermal function in the inverter to match the rated current of the motor. If it is not set properly, the motor will overheat, and could result in a fire. (Parameter F600)

: If a single inverter is used to control several motors, the electronic thermal function in the inverter cannot protect all the motors. Equip each motor with a thermal relay for protection.

HINT

- The selection of electric thermal protection in the inverter eliminates the need to use an external thermal relay for motor protection.

If the rated inverter current is different from the rated motor current (continuous), set the ratio using the parameter F600.

SETTING THE EXTENDED PARAMETERS

Applicable parameter: Extended parameter F---

The extended parameters are used to make the inverter deliver its full performance. To use the extended parameters, call the parameter F--- and press the (ENT) key. The extended parameter number is displayed. Once the number is displayed, the extended parameter can be set in the same way as the normal parameters. After setting the extended parameters, press the (MON) key.

HINT

Refer to pages 43 to 46 for lists of extended parameters. For details of the parameters and how to use them, contact your agent.

SEARCHING FOR PARAMETERS DIFFERENT FROM DEFAULT VALUES

Applicable parameter: Automatic edit function Gr.U

The parameters which are different from the default values can be displayed. Call the parameter Gr.U, then press the (ENT) key. The names of the parameters which are different from the default values are displayed. If several parameters are different from the default values, they can be seen by pressing the (▲) or (▼) key. These parameters can be changed in the same way as the normal parameters. After completing the operation, press the (MON) key.

OPERATIONS

DANGER

PROHIBITED

: Do not touch the inverter terminals when the power is supplied to the inverter even if the motor is stopped. Touching the inverter terminals could result in electrocution.

: Do not operate the switches with wet hands nor clean the switches with a wet cloth, etc., otherwise electrocution could result.

: When the auto-restart function is selected (F301 ≠ 0), the inverter may automatically restart when the power is turned on after a momentary power failure, possibly resulting in injury. Take preventive countermeasures with the inverter, motor and machine, such as installing warning labels on them to indicate this.

: If the retry function is selected (F303 ≠ 0), do not approach the motor when the motor is stopping due to an alarm. The motor may suddeny start, possibly resulting in injury. Take preventive countermeasures with the inverter, motor and machine, such as installing warning labels on them to indicate this.

MANDATORY

: Be sure to close the front cover before turning on the power.

: If the inverter produces smoke, odor or abnormal noises, turn off the input power immediately. Using the inverter in such a condition could result in a fire. Ask your agent to repair the inverter.

: Due to the possibility of contaminants entering the drive, disconnect the input power if the drive will be unused for extended periods. The leakage current caused by the contamination may result in fire.

WARNING

PROHIBITED

: Never touch the heatsink, as it becomes hot. Touching the heatsink could result in burns.

MANDATORY

: Run the inverter within the allowable range of operation of the motor and other components, otherwise breakage of the motor or other components or injury could result.

NOTICE

It may take up to one second before the inverter starts after the power is turned on.

Operation with Built-in Potentiometer and RUN and STOP Keys

(1) Connect the cables to the motor and power source.
(2) Turn the built-in potentiometer fully counterclockwise.
(3) Turn on the power.
(4) "0.0" is displayed on the display unit.
(5) Press the RUN key.
(6) Turn the built-in potentiometer clockwise gradually.
(7) The RUN lamp goes on. The motor starts and its rotation speed increases gradually.
(8) The operation frequency is displayed on the display unit.
(9) To stop the motor, press the STOP key.
(10) The motor speed decreases according to the deceleration pattern.
(11) The RUN lamp goes out.

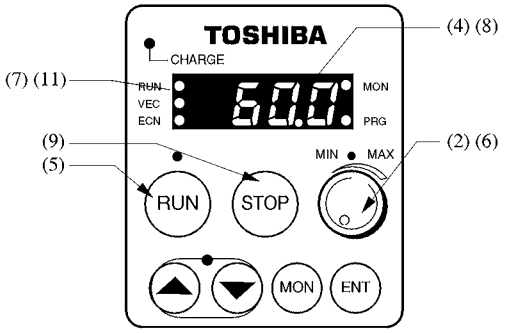

Operation with Built-in Potentiometer and External Start Signal

(1) Connect the cables to the motor and power source. (See "CONNECTING OF THE MAIN CIRCUITS.")
(2) Connect a start/stop switch between the control terminal F and CC (for forward rotation) or between R and CC (for reverse rotation). (See "CONNECTING THE CONTROL WIRES.")
(3) Turn the built-in potentiometer fully counterclockwise.
(4) Turn on the power.
(5) Set the parameters CMOd to "0" and FMOd to "2". (See "Setting the Starting and Stopping Methods" and "Setting the Frequency Command Method".)
(6) "0.0" is displayed on the display unit.
(7) Turn on the forward or reverse switch.
(8) Turn the built-in potentiometer clockwise gradually.
(9) The RUN lamp goes on. The motor starts and its rotation speed increases gradually.
(10) The operation frequency is displayed on the display unit.
(11) To stop operation, turn off the forward or reverse switch.
(12) The motor speed decreases according to the deceleration pattern.
(13) The RUN lamp goes out.

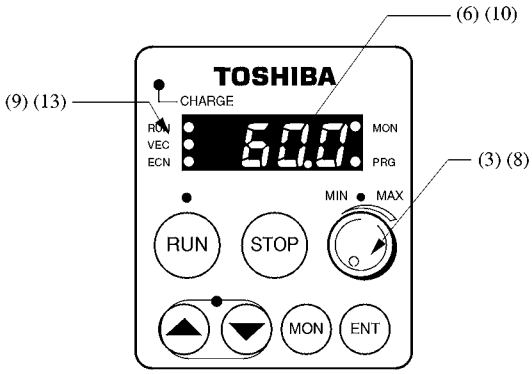

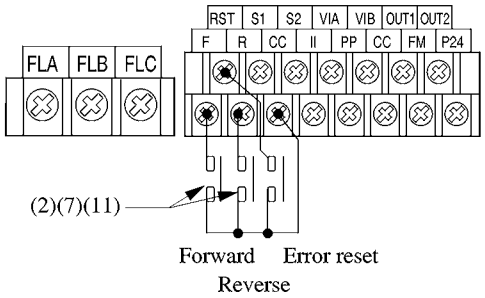

Setting the Frequency using External (0 - 10 V Voltage/4 - 20 mA Current) Signal and Operating using an External Start Signal

(1) Connect the cables to the motor and power source.

(2) Connect a start/stop switch between the control terminal F and CC (for forward rotation) or between R and CC (for reverse rotation).

External voltage command: Set the command voltage to 0 V. Apply the command voltage between the control terminal VIA and CC (on the 0 V side).

External current command: Set the command current to 4 mA. Apply the command current between the control terminal II and CC (on the 0 V side).

(See "CONNECTION OF CONTROL SIGNALS.")

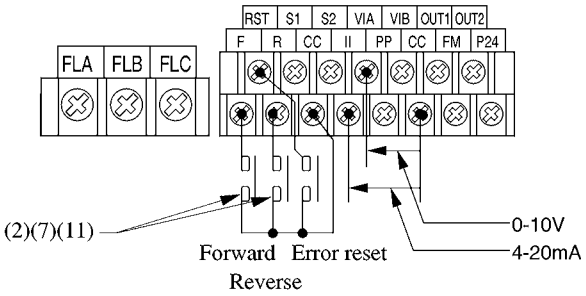

(3) Turn on the power.

(4) Set the parameter CMOd to "0". (See "Setting the Starting and Stopping Methods.")

(5) Set the parameter FMOd to "0". (See "Setting the Frequency Instruction Method.")

(6) If the external current command (4 to 20 mA) is used, set the parameter F201 to "20".

(7) "0.0" is displayed on the display unit.

(8) Turn on the forward or reverse switch.

(9) Increase the voltage or current command gradually.

(10) The RUN lamp goes on. The motor starts and its speed increases gradually.

(11) The operation frequency is displayed on the display unit.

(12) To stop operation, turn off the forward or reverse switch.

(13) The motor speed decreases according to the deceleration pattern.

(14) The RUN lamp goes out.

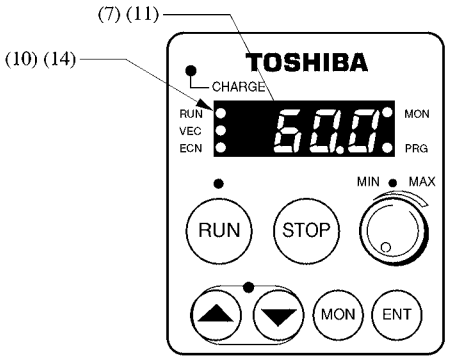

Setting the Frequency using Two External (0 - 10 V Voltage/4 - 20 mA Current) Signals and Operating using an External Start Signal

(1) Connect the cables to the motor and power source.

(2) Connect a start/stop switch between the control terminal F and CC (for forward rotation) or between R and CC (for reverse rotation).

(3) Apply two frequency commands to VIA (voltage command) and VIB (voltage command) or VIB (voltage command) and II (current command).

External voltage command: Set the command voltage to 0 V. Apply the command voltage between the control terminal VIA and CC (on the 0 V side).

External current command: Set the command current to 4 mA. Apply the command current between the control terminal II and CC (on the 0 V side).

(See "CONNECTING THE CONTROL SIGNAL.")

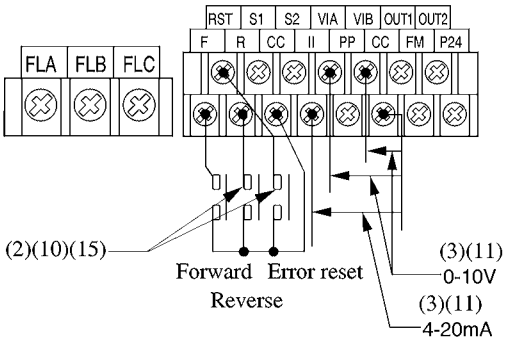

(4) Turn on the power.

(5) Set the parameter CMOd to "0". (See "Setting the Starting and Stopping Methods.")

(6) Set the parameter FMOd to "0". (See "Setting the Frequency Command Method.")

(7) Specify, using the parameter F200, whether to give priority to VIB and VIA or II. (See "Setting the Frequency Command Method.")

(8) If the external current command (4 to 20 mA) is used, set the parameter F201 to "20".

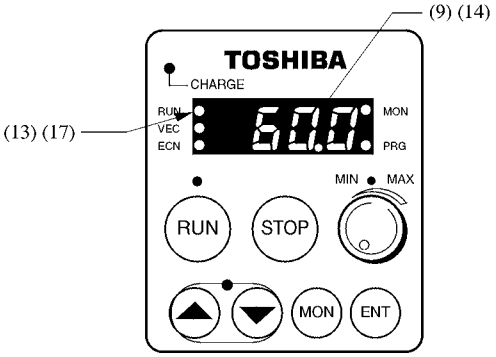

(9) "0.0" is displayed on the display unit.

(10) Turn on the forward or reverse switch.

(11) Increase the voltage current command gradually.

(12) The specified frequency command is used, when it is not "0". when it is "0", another frequency command is used.

(13) The RUN lamp goes on. The motor starts and its revolution speed increases gradually.

(14) The operation frequency is displayed on the display unit.

(15) To stop operation, turn off the forward or reverse switch.

(16) The motor revolution speed decreases according to the deceleration pattern.

(17) The RUN lamp goes out.

Selecting Preset Speed Frequencies, and Operating using an External Start Signal

(1) Connect the wires to the motor and power source. (See "CONNECTING OF THE MAIN CIRCUITS.")
(2) Connect a start/stop switch between the control terminal F and CC (for forward rotation) or between R and CC (for reverse rotation). (See "CONNECTING OF THE CONTROL SIGNALS.")
(3) Connect a frequency selector switch between the control terminals S1 and S2 and CC.
(4) Turn on the power.
(5) Set the desired frequency using the parameter Sr1. Sr2. Sr3.
(6) The frequency alternates when the switches connected to S1 and S2 is turned on (closed) and turned off (opened). Select the desired frequency.
(7) If both S1 and S2 are turned off, the frequency set with the parameter FMOd is selected. (Built-in potentiometer by default)
Set this frequency to 0. (When the built-in potentiometer is used for control, turn it fully counterclockwise.)
(8) "0.0" is displayed on the display unit.
(9) Turn on the forward or reverse switch.
(10) If both S1 and S2 are off and the command is set to 0, increase the command level.
(11) The RUN lamp goes on. The motor starts and its rotation speed increases gradually.
(12) The operation frequency is displayed on the display unit.
(13) To stop operation, turn off the forward or reverse switch.
(14) The motor speed decreases according to the deceleration pattern.
(15) The RUN lamp goes out.

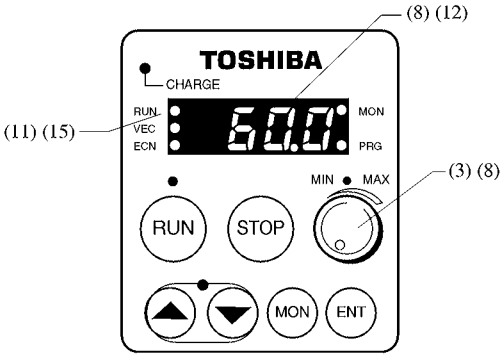

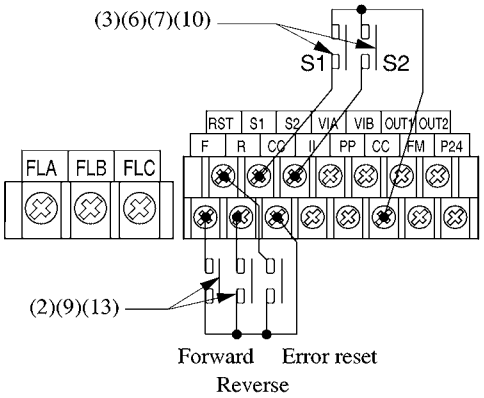

S1 OFF	S2 OFF	
S1 ON	S2 OFF	Sr1
S1 OFF	S2 ON	Sr2
S1 ON	S2 ON	Sr3

HINT

A maximum of fifteen internal speed set values are available by changing the functions of the control terminals.

MONITORING OPERATING CONDITIONS

The conditions of the inverter during operation or in case of a trip can be checked as shown below.

(1) Keep the (MON) key depressed until the MON lamp goes on.

(2) The first monitor item "Rotational Direction Fr-_" is displayed on the display unit.

(3) Select a desired monitor item with the (▲) or (▼) key.

(4) After completing the monitoring, press the (MON) key.

(5) The operating frequency is displayed on the display unit.

Example of Displaying the Inverter Condition

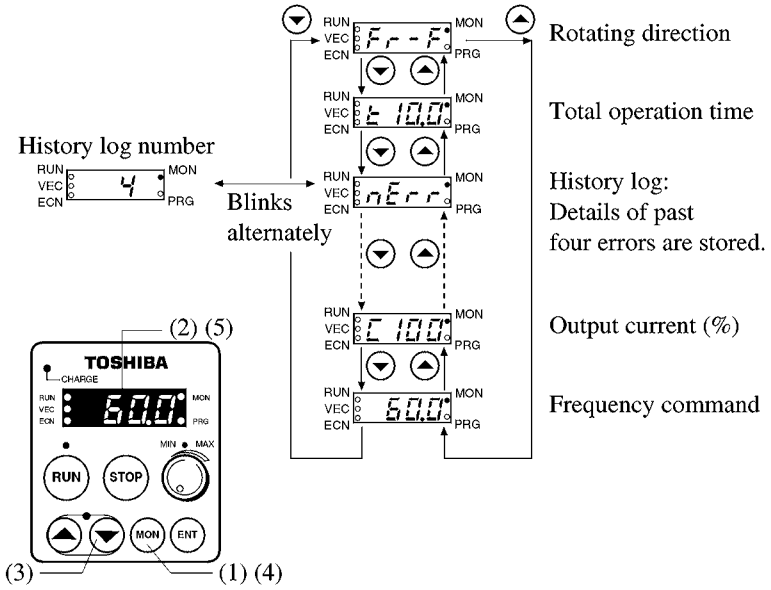

Monitor items	Display	Descriptions
Rotating direction	Fr-_	Forward rotation: Fr-F, reverse rotation: Fr-r
Cumulative run time	t _.._	Cumulative run time for which the inverter output frequency is more than 0.0 Hz (i.e., operating condition) (0.01 corresponds to one hour.)
Past trip #4	4↔___	Data of the fourth previous error counted from the latest error. Data and 4 are displayed alternately.
Past trip #3	3↔___	Data of the third previous error counted from the latest error. Data and 3 are displayed alternately.
Past trip #2	2↔___	Data of the second previous error counted from the latest error. Data and 2 are displayed alternately.
Past trip #1	1↔ ___	Data of the latest error. Data and 1 are displayed alternately.
Memory version	uE___	Version of the internal memory
CPU version	u ___	Version of the internal microprocessor
Output terminal status monitor	O ___	ON/OFF condition of the control output signals RUN VEC ECN MON PRG; O 1; MON is ON. 1; is OFF. , Output terminal OUT1 Output terminal OUT2
Input terminal status monitor	A___	ON/OFF condition of the control input signals RUN VEC ECN MON PRG; A 1.1.1; MON is ON. 1; is OFF. , input terminal S2 input terminal S1 input terminal F input terminal R input terminal RST
Output voltage monitor	P___	Output voltage of the inverter (%)
Input voltage monitor	y ___	Input voltage of the inverter (%)
Load current monitor	C ___	Ratio of the output current to the rated inverter current (%)
Operation frequency command value	_._	Operation frequency command (Hz)

PROTECTIVE FUNCTIONS (TRIPS INFORMATION)

Trips and Countermeasures

Display	Description	Countermeasures
OC1	Overcurrent during acceleration	1. Increase the acceleration time (ACC). 2. Increase or decrease the torque boost level (ub).
OC2	Overcurrent during deceleration	1. Increase the deceleration time (dEC).
OC3	Overcurrent during constant-speed run	1. Reduce the variance of the load conditions.
OCA	Phase short circuit	1. The main circuit is abnormal. Ask your agent to repair the inverter.
OCL	Load-end short circuit (output terminal check) trip during start-up	1. The insulation of the main output circuit or motor is abnormal. 2. Check the wiring and insulation. 3. If 1 and 2 are normal, the elements of the main circuit may be defective. Ask your agent to repair the inverter.
OP1	Overvoltage during acceleration	1. Check the power voltage. 2. Check if the power is turned on and off frequently. 3. Check whether or not excessive current flows instantaneously through a load.
OP2	Overvoltage during deceleration	1. Increase the deceleration time (dEC).
OP3	Overvoltage	1. Check the power voltage. 2. Check if the power is turned on and off frequently. 3. Check whether or not excessive current flows instantaneously through a load.
UOFF	Undervoltage	1. The input voltage is too low. 2. Check the power supply condition and input wiring.
OL1	Inverter overload trip	1. The load is excessive. Reduce it. 2. The V/f characteristics or torque boost level are not proper. Check whether or not a 50 Hz rated motor runs on the 60 Hz base frequency. Increase or decrease the torque boost level. 3. Increase the inverter rating.
OL2	Motor overload trip	
OLr	Braking resistor over load trip	1. Increase the deceleration time (dEC).
OH	Overheat trip	1. Check whether or not the ambient temperature is too high. If the ambient temperature is too high, remove the seal from the top cover.
E	Emergency stop	1. Operation stops on the panel during automatic or remote operation.
EOFF	Checking emergency stop acceptance display	1. Operation stops on the panel during automatic or remote operation. Stop operation in an emergency by pressing the (STOP) key twice. To cancel an emergency stop, press any other key.
EEPI	EEPROM fault	1. Turn off the power, then turn it on again. 2. If the EEPROM does not recover from the error, ask your agent to repair the inverter.

Display	Description	Countermeasures
Etn	Automatic tuning error	1. Check the Torque up parameters.
EPHO	Output phase loss	1. Output phase loss occur. Check the wiring between the inverter and motor.
Err.1	Frequency setting signal error	1. The point 1 and point 2 frequency setting signals parameter are too close to each other. Reset these signals so that points 1 and 2 are apart from each other.
Err.2	RAM fault	1. Ask your agent to repair the inverter.
Err.3	ROM fault	1. Ask your agent to repair the inverter.
Err.4	CPU fault	1. Ask your agent to repair the inverter.
Err.5	Communication interruption error	1. Check the communication device, wiring, etc.
EtYP	Inverter typeform error	1. If the PCB replaced, set standard setting mode selection (tYP) to 6 to clear the error.
C	Stall prevention alarm	1. Increase the acceleration time (ACC). 2. Increase or decrease the torque boost level.
P	Overvoltage alarm	1. Increase the deceleration time (dEC).
L	Overload alarm	1. The load is excessive. Reduce it. 2. Increase the inverter rating.
HI LO	Set value alarm (Error message and data are displayed twice each alternately.)	1. An incorrect set value is found when reading or writing data. Check the set values, then reset the incorrect value.

NOFF, EOFF, Err1 and alarms are displayed only. Inverter does not trip.

Resetting Errors When Trip Is Activated

WARNING

MANDATORY : Be sure to eliminate the cause of the error before resetting, otherwise inverter damage could result.
: If the protective function is activated due to overload or overheat, wait for five minutes or more, then reset the error. An attempt to reset without waiting for five minutes or more could result in an inverter problem.

To reset the protective function, do any of the following:

(1) Turn on and off the error reset control input signal.

(2) Press the STOP key twice while the protective function is displayed.

(3) Turn off the power.

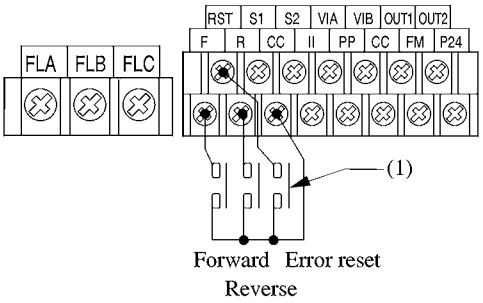

Cautions during automatic tuning

The automatic tuning setting is accepted only while the motor is stopped. Due to the motor residual voltage, an error may occur in the tuning if you set it as soon as the motor is stopped. The automatic tuning will normally finish within 3 seconds. If an error occurs, the inverter will trip and the motor parameters (F401 ~ F404) will not be set. An automatic tuning error may occur in the following cases:

- Motor capacity is 2 ranks or more below that of inverter.
- The wire length between the inverter and motor is 30 meters or more.
- Special motors, such as the high-speed motors or high-slip motors, are connected.

Output open phase detection

In the following cases, the output open phase detection must be set to "Activated (first running only at start up after power on)" (F605 = 1):

- When auto-restart function after momentary power failure is selected (F301 ≠ 0) and the inverter is restarted.
- During inching operations (restarting within 1 second of stopping).

In the following cases, the inverter may trip or output open phase detection may not function properly:

- Motor capacity is 2 ranks or more below that of inverter.
- Motor impedance is low (high-speed motor connected.)
- Some motors are connected in parallel and only one of them has a failed phase.

SPECIFICATIONS

Items		Descriptions									
Input voltage class		Single phase 200V/Three phase 200V/Three phase 400V									
Applicable motor (kW)		0.2	0.4	0.75	1.5	2.2	3.7	5.5	7.5	11	15
Type		VFS7S (1ϕ-200V input) /VFS7 (3ϕ-200V input) /VFS7 (3ϕ-400V input)									
Form	1 ϕ 200V input	2002UP	2004UP	2007UP	2015UP	2022UP	–	–	–	–	–
	3 ϕ *200V input*	–	*2004UP*	*2007UP*	*2015UP*	*2022UP*	*2037UPL*	*2055UPLH*	*2075UPLH*	--	---
	3 ϕ 400V input	--	--	4007UPL	4015UPL	4022UPL	4037UPL	4055UPLH	4075UPLH	4110UPLH	4150UPLH
Rated capacity (kVA)		0.6	1.2	1.6	3.0	4.0	6.5	9.5	13	19	25*
Rated current (A)	1 ϕ 200V input	1.5	3.0	4.0	7.5	10	–	–	–	–	–
	3 ϕ 200V input	–	3.0	4.0	7.5	10	16.5	25	33	–	–
	3 ϕ 400V input	–	–	2.1	3.7	5.0	8.5	13	17	25	32.6*
Power source	1 ϕ 200V input	Single 200 to 230Vac ± 10%–50/60Hz ±5%									
	3 ϕ 200V input	Three phase 200 to 230Vac ± 10%–50/60Hz ±5%									
	3 ϕ 400V input	Three phase 380 to 460Vac ± 10%–50/60Hz ±5%									
EMI noise filter		EMI noise filter is installed in 3ϕ-400V input unit and 3ϕ-200V input 3.7kw above.									
Major control functions	Control method	Sinusoidal wave PWM control									
	Rated output voltage	Output voltage is controllable between 0% and 120% with the output voltage adjustment function, provided the rated voltage is 100%. (Output over the input voltage is disabled.)									
	Output frequency range	0.5 to 320 Hz: Set to 0.5 to 80 Hz by default. Maximum frequency is adjustable between 30 and 320 Hz.									
	Frequency setting resolution	0.1 Hz: Input from the operation panel, 0.2 Hz: Analog input (at maximum frequency of 100 Hz)									
	Frequency accuracy	Digital setting: ±0.01% of the maximum output frequency or less (at -10 to +50°C) Analog setting: ±0.5% of the maximum output frequency or less (at 25 ±10°C)									
	Voltage/frequency characteristics	Constant V/f mode,variable torque mode, sensorless vector control mode, automatic torque boost mode, base frequency adjustment (25 to 320 Hz), and torque boost adjustment (0 to 30%)									
	Overload current rating	150%, 60 seconds									
	Frequency setting signal	Built-in potentiometer on the front panel, external potentiometer (1k to 10 kΩvariable resistor connectable), 0 to 10 VDC (input impedance: VIA = 30.55 kΩ, VIB = 30 kΩ), 4 to 20 mA (input impedance: 400 Ω), and optional characteristics (gain, bias) can be preset by 2-point setting									
	PI control	Proportional gain, integral gain adjustments									
Operation specifications	Start-up frequency	Adjustable between 0.5 and 10 Hz									
	Frequency jump	Three points (by setting jump frequencies and jump widths)									
	PWM carrier frequency	Adjustable between 2.2 and 12 kHz (Default: 12 kHz)									
	Acceleration & deceleration time	0.1 to 3600 seconds, acceleration time 1 and 2 selectable, S1 and S2 acceleration/deceleration patterns selectable									
	Jog run	JOG run from panel with JOG mode selection. Terminal block operation possible with parameter settings									
	Preset speed operation	Set frequency +15 preset speeds possible with open/closed combinations of SS1, SS2, SS3, SS4 and CC									
	Retry operation	Retries are enabled ten times maximum (set with the parameter) after checking the main circuit elements if the protective function is activated.									
	Braking	Externally connected braking resistor (Optional)									
	DC braking	Braking start frequency (0 to max. frequency), braking level (0 to 100%), braking time (0 to 20 seconds)									
	Input terminal functions (selection)	Forward & reverse input signals, preset speed select input signals, reset input signals, etc.									
	Output terminal functions (selection)	Low-speed detection output signal, speed-reached output signal, etc.									
	Fault signal	1c contact output (250 Vac, 30 Vdc– 2 A resistive load, 250Vac, 30 Vdc–1.5 A inductive load cosϕ=0.4)									
	Output for frequency counter or ammeter	Analog output (1 mA dc full scale ammeter or 7.5 Vdc, 1 mA full scale DC ammeter or rectifying AC voltmeter, 225% current max., 1 mA DC, 7.5 Vdc full scale)									

Items		Descriptions									
Input voltage class		Single phase 200V/Three phase 200V/Three phase 400V									
Applicable motor (kW)		0.2	0.4	0.75	1.5	2.2	3.7	5.5	7.5	11	15
Type		VFS7S (1ϕ -200V input) /VFS7 (3ϕ -200V input) /VFS7 (3ϕ -400V input)									
Form	1 ϕ 200V input	2002UP	2004UP	2007UP	2015UP	2022UP	–	–	–	–	–
	3 ϕ 200V input	--	2004UP	2007UP	2015UP	2022UP	2037UPL	2055UPLH	2075UPLH	--	--
	3 ϕ 400V input	--	--	4007UPL	4015UPL	4022UPL	4037UPL	4055UPLH	4075UPLH	4110UPLH	4150UPLH
Protective function	Protective functions	Stall prevention, current limit, overcurrent, output short-circuit, overvoltage, overvoltage limit, undervoltage, overload by electronic thermal relay, arm overcurrent during starting, overcurrent on load side when starting, and emergency stop (selection)									
	Measures against instantaneous power failure	Auto-restart and regeneration power ride-through control									
	Electronic thermal characteristics	Standard motor and constant torque VF motor selectable; overload trip and overload stall selectable.									
Fuvironment	Service environment	Indoors. Altitude of less than 1000 meters. Must not be exposed to direct sunlight, corrosive or explosive gas or vapor. Vibration: 5.9 m/s^2 (0.6 G) or less (at 10 to 55 Hz)									
	Ambient temperature & relative humidity	-10 to 40°C (50°C without upper seal), 93% (No condensation)									
Protective method		NEMA type1									
Cooling		Self cooling			Forced air cooling						

Note*)These values are when PWM carrier frequency is 4kHz. When PWM carrier frequency is 12kHz, rated current of VFS7-4150UPLH is 29.3A(23kVA).

EXTERNAL DIMENSIONS

When installing the inverter, note that the outside dimensions differ depending on the capacities.

■ VFS7S-2002UP/2004UP, VFS7-2004UP/2007UP/2015UP

Use M4 screws to install.

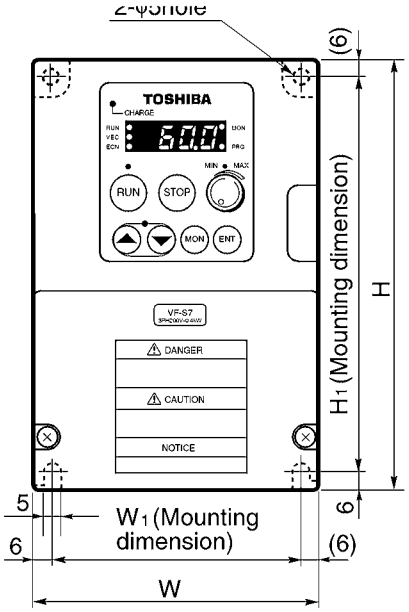

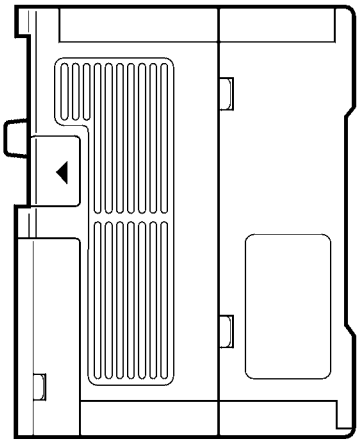

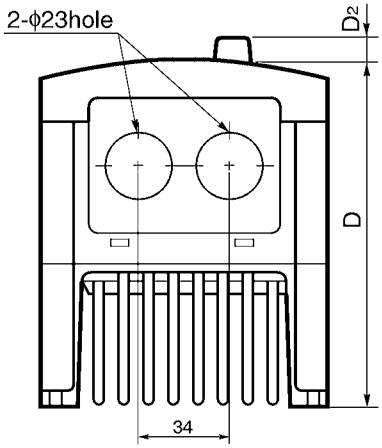

Note) VFS7-2015UP has a fan at the bottom.

Outside dimensions

Unit: mm

Type	Outside dimensions						Approx. weight (kg)
	W	H	D	W_1	H_1	D_2	
VFS7S-2002UP	105	150	89	93	138	4.5	0.8
VFS7S-2004UP	105	150	127.5	93	138	4.5	1.3
VFS7-2004UP	105	150	89	93	138	4.5	0.8
VFS7-2007UP	105	150	121	93	138	4.5	1.2
VFS7-2015UP	105	150	127.5	93	138	4.5	1.3

■ VFS7S-2007UP/2015UP/2022UP, VFS7-2022UP

Use M5 screws to install.

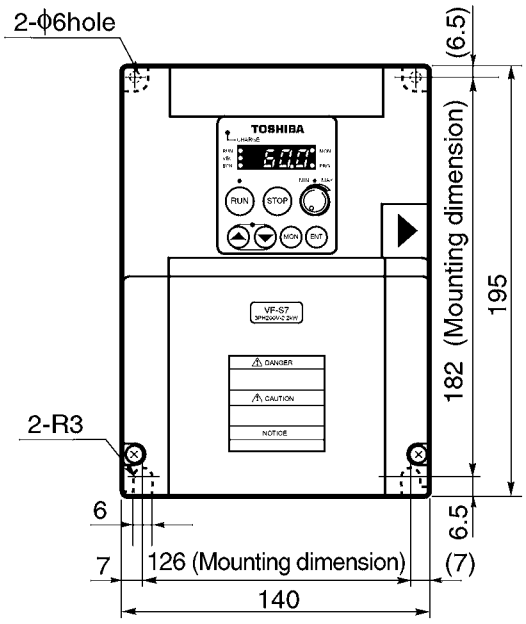

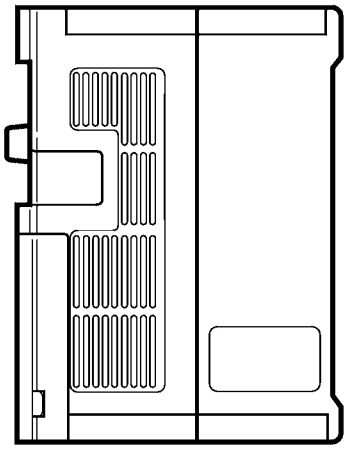

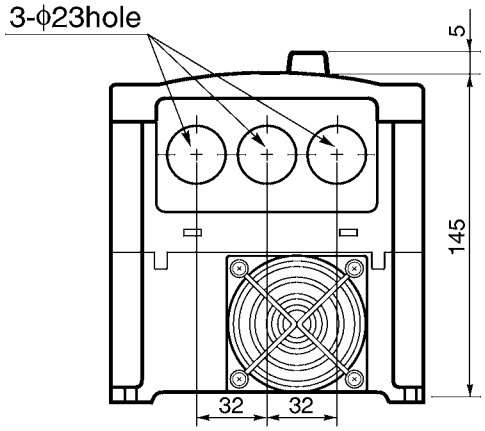

Unit: mm

Type	Approx.weight
VFS7S-2007UP	2.3kg
VFS7S-2015UP	2.3kg
VFS7S-2022UP	2.4kg
VFS7-2022UP	2.1kg

Note) VFS7S-2007UP has no fan.

■ VFS7-4007UPLH/4015UPLH

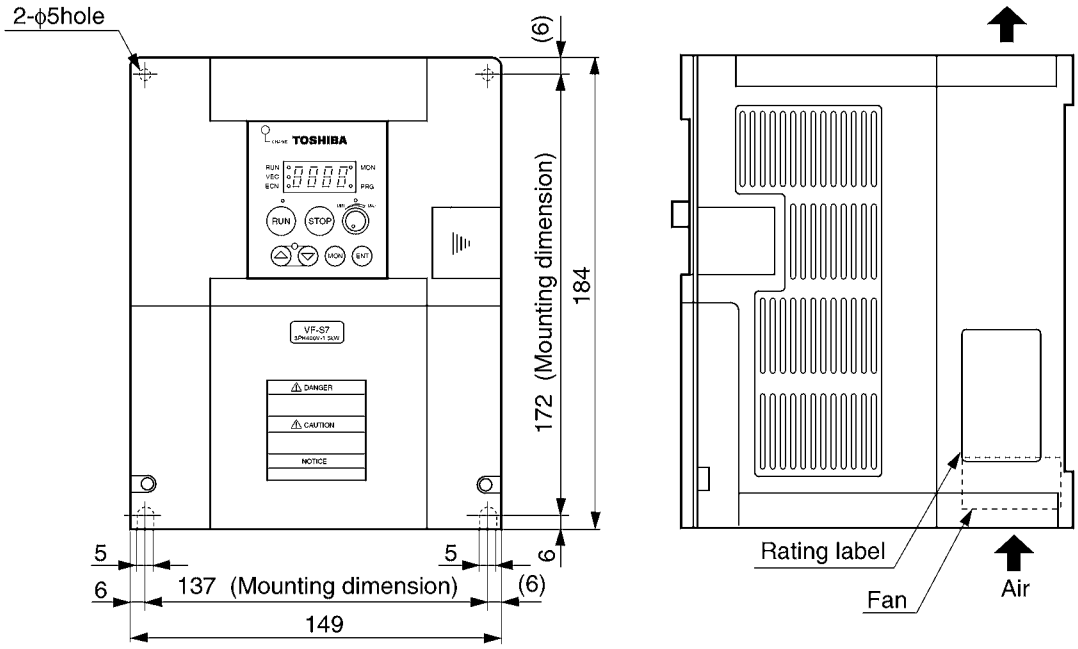

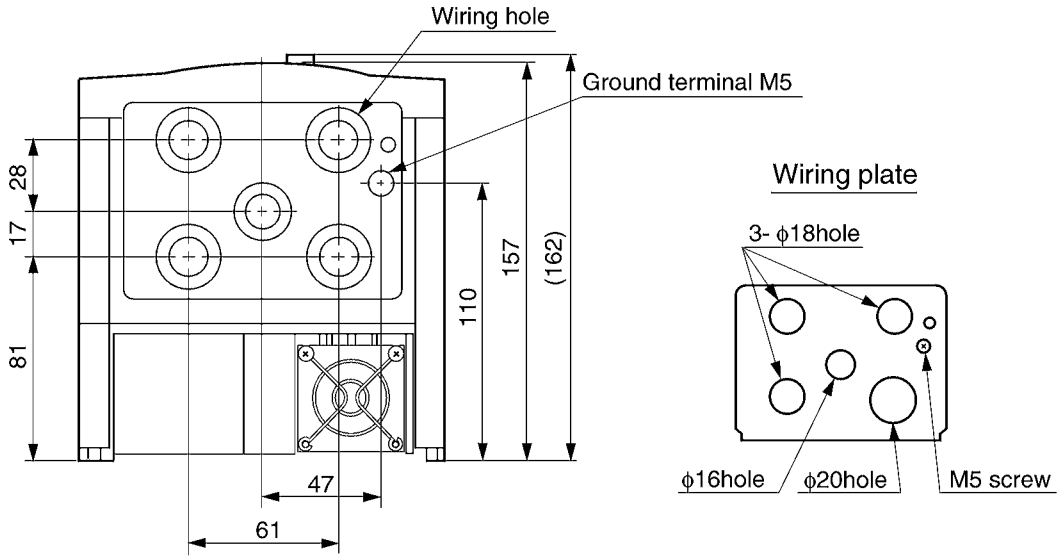

Note) VFS7-4007UPL has no fan.

Unit: mm

Type	Approx. weight
VFS7-4007UPL	2.2kg
VFS7-4015UPL	2.3kg

■ VFS7-2037UPL/4022UPL/4037UPL

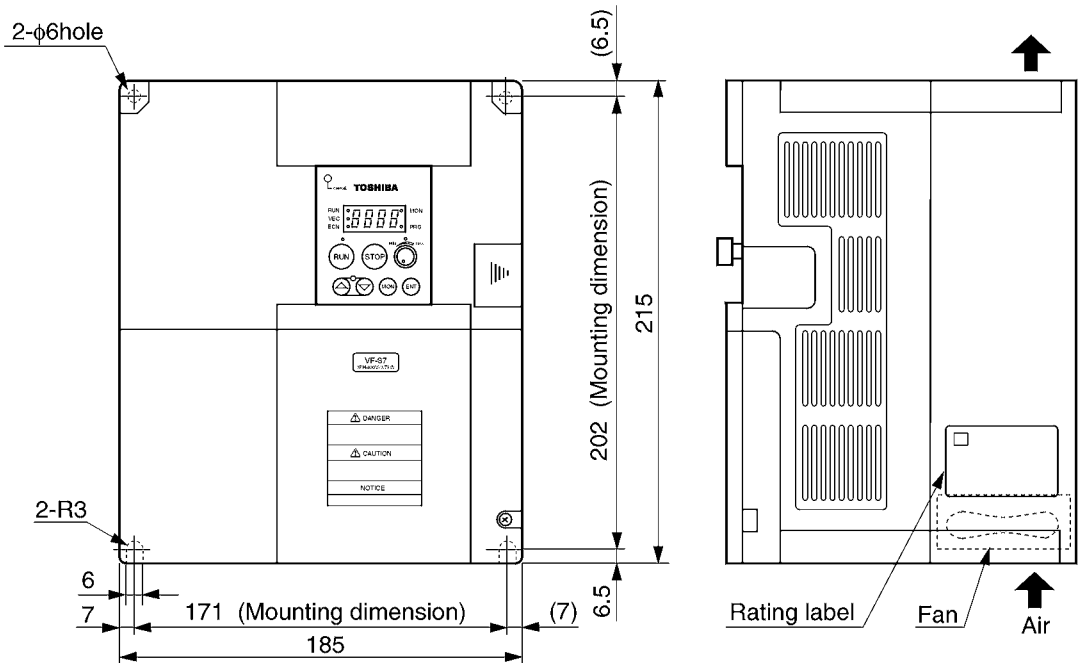

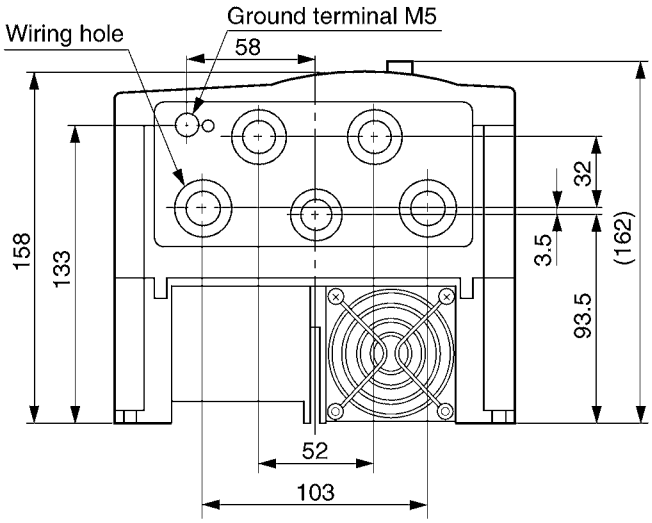

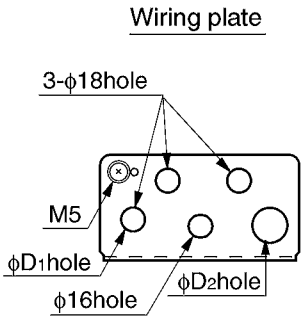

Unit: mm

Type	D1	D2	Approx.weight
VFS7-2037UPL	20	24	3.6kg
VFS7-4022UPL	18	20	3.4kg
VFS7-4037UPL	18	20	3.5kg

■ VFS7-2055UPLH/2075UPLH/4055UPLH/4075UPLH

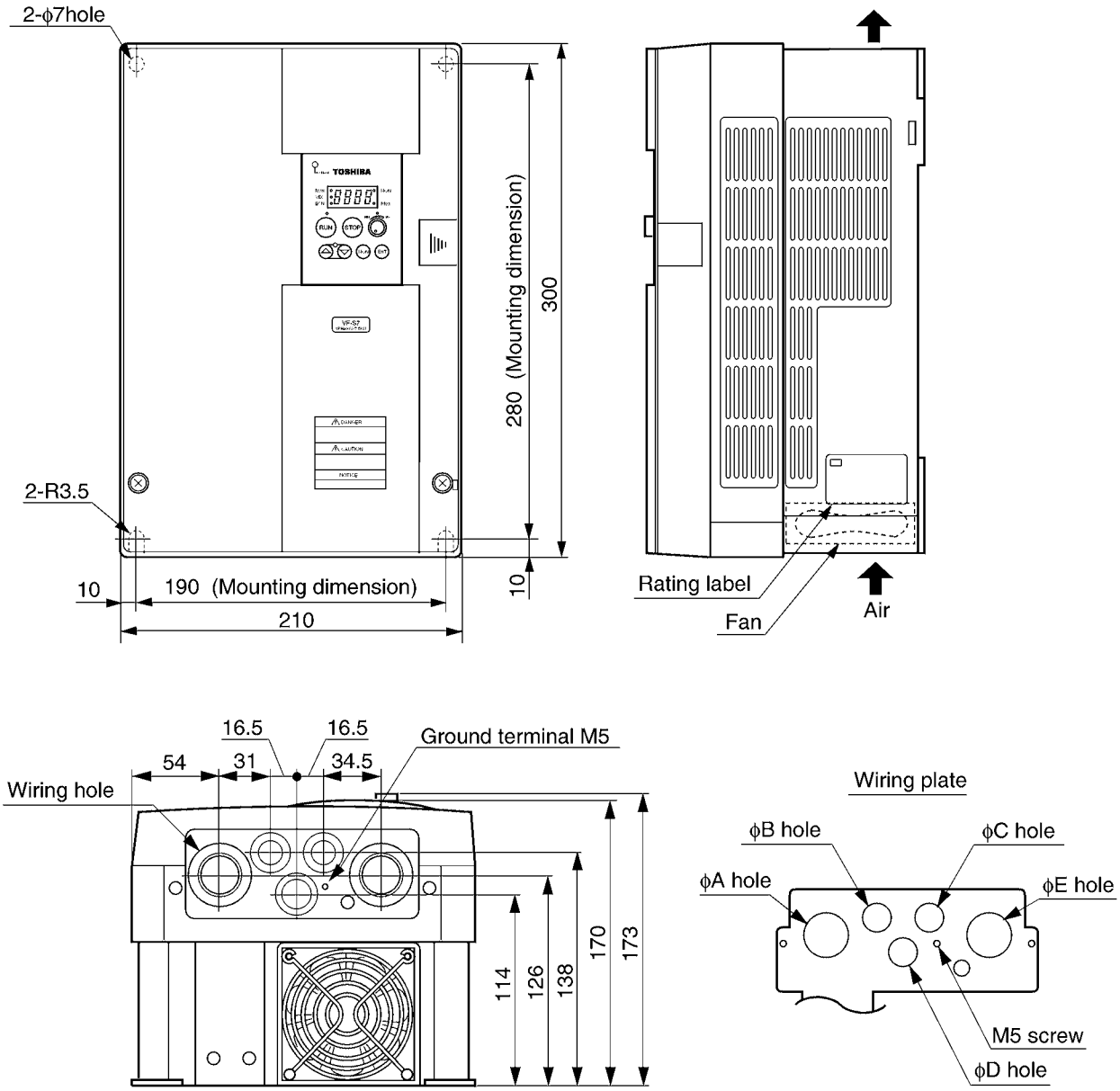

Unit: mm

Type	Wiring hole dimensions					Approx.weight
	A	B	C	D	E	
VFS7-2055UPLH	24	18	18	20	30	6.8Kg
VFS7-2075UPLH	28	18	18	20	30	7.0Kg
VFS7-4055UPLH	20	18	18	16	24	7.0Kg
VFS7-4075UPLH	22	18	18	16	24	7.0Kg

■ VFS7-4110UPLH/4150UPLH

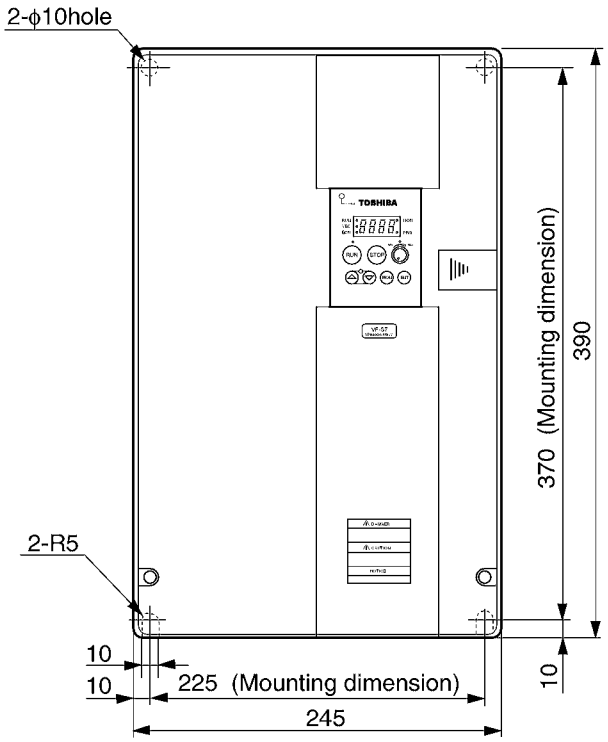

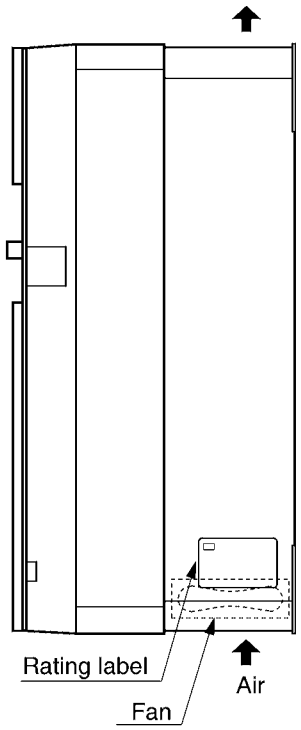

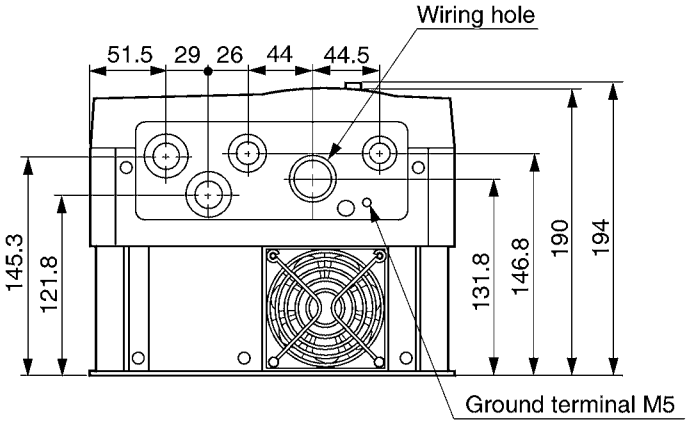

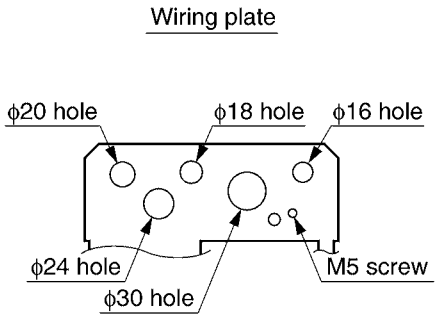

Unit: mm

Type	Approx.weight
VFS7-4110UPLH	11kg
VFS7-4150UPLH	11kg

PARAMETER LIST

■ Basic Parameters (Group No. 00)

※These parameters cannot be changed while running.

Title	Communication Number	Function	Adjustable range	Default value
AU1	0000	Automatic acceleration and deceleration	0: No, 1: Yes	0
AU2	0001	Automatic torque boost ※	0: No 1: Automatic torque boost 2: Sensorless vector control 3: Sensorless vector control with automatic tuning	0
AU3	–	Automatic environment setting ※	0: No 1: Automatic 50 Hz motor 2: Automatic 60 Hz motor	0
CMOd	0003	Command mode selection	0: Terminal block, 1: Panel	1
FMOd	0004	Frequency setting mode selection	0: Terminal block, 1: Panel , 2: Built-in potentiometer	2
FMSL	0005	FM terminal function selection	0: Frequency meter 1: Output current meter 2: Operation frequency meter adjustment 3: Current meter 100% adjustment	0
FM	0006	Connected meter adjustment	Frequency or current displayed	-
tYP	0007	Standard setting mode selection ※	0: No action, 1: 50 Hz standard, 2: 60 Hz standard, 3: Default setting, 4: Clearing error logs, 5: Clearing accumulated operation time 6: Initialize inverter typeform	3
Fr	0008	Forward/reverse selection (Panel)	0: Forward, 1: Reverse	0
ACC	0009	Acceleration time #1 (s)	0.1 ~ 3600	10.0
dEC	0010	Deceleration time #1 (s)	0.1 ~ 3600	10.0
FH	0011	Max. frequency (Hz) ※	30.0 ~ 320.0	80.0
UL	0012	Upper limit frequency (Hz)	0.5 ~ FH	80.0
LL	0013	Lower limit frequency (Hz)	0.0 ~ UL	0.0
uL	0014	Base frequency (Hz)	25.0 ~ 320.0	60.0
Pt	0015	V/f pattern ※	0: Constant V/f 1: Square reduction 2: Automatic torque boost 3: Sensorless vector control 4: Automatic energy saving	0
ub	0016	Voltage boost (%)	0.0 ~ 30.0 Refer to table 3 on the page 48.	*
OLM	0017	Selection of electric thermal protection characteristics		0

Setting	Type	Overload protection	Overload stall
0	Standard motor	❍	×
1		❍	❍
2		×	×
3		×	❍
4	VF motor	❍	×
5		❍	❍
6		×	×
7		×	❍

Sr1 ~Sr7	0018~ 0024	Preset speed 1 to 7. (Hz)	LL ~ UL	0.0
F---	–	Extended parameters	---	
GrU	–	Automatic edit function	Changed parameters displayed	

■ Extended Parameters (I/O parameter group No. 01)

Title	Communication Number	Function	Adjustable range	Default value
F100	0100	Low speed signal output (Hz)	0.0 ~ FH	0.0
F101	0101	Speed-reach frequency (Hz)	0.0 ~ FH	0.0
F102	0102	Speed-reached detection band (Hz)	0.0 ~ FH	2.5
F103	0103	ST signal selection	0: Standard, 1: Normally ON, 2: Linking with F/R	1
F104	0104	RST signal selection	0: Standard, 1: Resetting if no signal is input to terminal	0
F110	0110	Always active function selection	0 ~ 44 Refer to table 1 on page 47.	0: No function provided
F111	0111	Input terminal selection #1	0 ~ 44 Refer to table 1 on page 47.	2 : F
F112	0112	Input terminal selection #2	0 ~ 44 Refer to table 1 on page 47.	3 : R
F113	0113	Input terminal selection #3	0 ~ 44 Refer to table 1 on page 47.	10 : RST
F114	0114	Input terminal selection #4	0 ~ 44 Refer to table 1 on page 47.	6 : S1
F115	0115	Input terminal selection #5	0 ~ 44 Refer to table 1 on page 47.	7 S2
F130	0130	Output terminal selection #1	0 ~ 13 Refer to table 2 on page 48.	4 : LOW
F131	0131	Output terminal selection #2	0 ~ 13 Refer to table 2 on page 48.	6 : RCH
F132	0132	Output terminal selection #3	0 ~ 13 Refer to table 2 on page 48.	10 : FL
F172	0172	Voltage boost #2 (%)	0.0 ~ 25.0 Refer to table 3 on page 48.	*
F173	0173	Motor overload protection level #2 (%)	10 ~ 100	100

■ Extended Parameters (Frequency parameter group No. 02)

Title	Communication Number	Function	Adjustable range	Default value
F200	0200	Frequency priority selection	0: VIA, II 1: VIB 2: VIA, II / VIB (selected by terminal signal) 3: Panel frequency up / down input 4: Panel frequency up / down input (memorized value after power off or reset)	0
F201	0201	VIA reference point #1 (%)	0 ~ 100	0
F202	0202	VIA point #1 frequency (Hz)	0.0 ~ 320.0	0.0
F203	0203	VIA reference point #2 (%)	0 ~ 100	100
F204	0204	VIA point #2 frequency (Hz)	0.0 ~ 320.0	80.0
F210	0210	VIB reference point #1 in F200 =0, 1, 2 (%)	0 ~ 100	0
		Panel frequency - up input response time in F200 =3, 4	0 ~ 100 (1:0.1s)	0
F211	0211	VIB point #1 frequency in F200 =0, 1, 2 (Hz)	0.0 ~ 320.0	0.0
		Panel frequency - up input step width in F200 =3, 4 (Hz)	0.0 ~ 320.0	0.0
F212	0212	VIB reference point #2 in F200 =0, 1, 2 (%)	0 ~ 100	100
		Panel frequency - down input response time in F200 =3, 4	0 ~ 100 (1:0.1s)	100
F213	0213	VIB point #2 frequency in F200 =0, 1, 2 (Hz)	0.0 ~ 320.0	80.0
		Panel frequency - down input step width in F200 =3, 4 (Hz)	0.0 ~ 320.0	80.0
F240	0240	Start-up frequency (Hz)	0.5 ~ 10.0	0.5
F241	0241	Run frequency (Hz)	0.0 ~ FH	0.0
F242	0242	Run frequency hysteresis (Hz)	0.0 ~ FH	0.0
F250	0250	DC injection starting frequency (Hz)	0.0 ~ FH	0.0
F251	0251	DC injection current (%)	0 ~ 100	30
F252	0252	DC injection time (s)	0.0 ~ 20.0	1.0
F260	0260	Jog run frequency (Hz)	0.0 ~ 20.0	0.0
F261	0261	Jog stop control	0 : Stopping by deceleration 1 : Free running 2 : DC injection brake	0
F270	0270	Jump frequency #1 (Hz)	LL ~ UL	0.0
F271	0271	Jump frequency band #1 (Hz)	0.0 ~ 30.0	0.0
F272	0272	Jump frequency #2 (Hz)	LL ~ UL	0.0
F273	0273	Jump frequency band #2 (Hz)	0.0 ~ 30.0	0.0
F274	0274	Jump frequency #3 (Hz)	LL ~ UL	0.0
F275	0275	Jump frequency band #3 (Hz)	0.0 ~ 30.0	0.0
F280 ~F294	0280 ~0294	Preset speed 1 to 15 (Hz)	LL ~ UL	0.0

※These parameters cannot be changed while running.

■ Extended Parameters (Operating mode parameter group No. 03)

Title	Communication Number	Function	Adjustable range	Default value
F300	0300	PWM carrier frequency (kHz)	2.2 ~ 12.0	12.0
F301	0301	Auto-restart	0: No, 1: Instantaneous power failure, 2: ST, 3: Instantaneous power failure + ST	0
F302	0302	Regeneration power ride-through control	0: No, 1: Yes	0
F303	0303	Retry selection (Number of times)	0 ~ 10	0
F304	0304	Regenerative braking selection	0: No, 1: Yes	0
F305	0305	Overvoltage stall protection	0: Enabled (standard level) 1: Disabled 2: Enabled (high level)	0
F306	0306	Output voltage adjustment (%)	0 ~120	100
F307	0307	Line voltage compensation ※	0: No, 1: Yes	0
F308	0308	Braking resistor overload detection time constant	1~255	39
F360	0360	PI control	0: No, 1: Yes	0
F362	0362	Proportional gain	0.01 ~ 100.0	0.30
F363	0363	Integral gain	0.01 ~ 100.0	0.20

■ Extended Parameters (Torque up parameter group No. 04)

Title	Communication Number	Function	Adjustable range	Default value
F400	0400	Automatic tuning ※	0: Use factory setting, 1: Use F401 ~ F404, 2: Automatic Tuning	0
F401	0401	Slip frequency gain	0 ~ 255 Refer to table 3 on the page 48.	*
F402	0402	Motor constant 1	0 ~ 255 Refer to table 3 on the page 48.	*
F403	0403	Motor constant 2	0 ~ 255 Refer to table 3 on the page 48.	*
F404	0404	Motor constant 3	0 ~ 255 Refer to table 3 on the page 48.	*
F405	0405	Load inertia	0: Small, 1: Medium, 2: Large, 3: Very large	0

■ Extended Parameters (Acceleration & deceleration time parameter group No. 05)

Title	Communication Number	Function	Adjustable range	Default value
F500	0500	Acceleration time #2 (s)	0.1 ~ 3600	10.0
F501	0501	Deceleration time #2 (s)	0.1 ~ 3600	10.0
F502	0502	Acceleration & deceleration pattern #1	0: Linear 1: S shape pattern 1 2: S shape pattern 2	0
F503	0503	Acceleration & deceleration pattern #2		0
F504	0504	Acceleration & deceleration patterns #1 &# 2 selection	0: Acceleration & deceleration pattern 1 1: Acceleration & deceleration pattern 2	0
F505	0505	Acceleration/deceleration patterns #1/#2 switching frequency (Hz)	0.0 ~UL	0.0

■ Extended Parameters (Protection parameter group No. 06)

Title	Communication Number	Function	Adjustable range	Default value
F600	0600	Motor overload protection level (%)	10 ~ 100	100
F601	0601	Stall protection level (%)	10 ~ 199, 200 (OFF)	150
F602	0602	Fault trip saving	0: No, 1: Yes	0
F603	0603	Emergency stop selection	0: Coast to stop 1: Stopping after deceleration 2: Stopping by emergency DC braking	0
F604	0604	Emergency DC inject time (s)	0.0 ~ 20.0	1.0
F605	0605	Open phase detection parameter	0: Not activated 1: Activated (first running only at start up after power on) 2: Activated (running only at start up)	0
F616	0616	Over-current detection level (%)	10 ~ 200	100
F618	0618	Over-current detection time (s)	0.0 ~ 10.0	0.5

■ Extended Parameters (Panel parameter group No. 07)

Title	Communication Number	Function	Adjustable range	Default value
F700	0700	Parameter setting disable selection	0: Enable (except F00d and C00d in running) 1: Disable 2: Enable	0
F701	0701	Unit selection	0: Not changed 1: Change % into A, V 2: F702 enable 3: Convert % into A, V F702 enable	0
F702	0702	Frequency units multiplication factor	0.01 ~ 200.0	1.00

■ Extended Parameters (Communication parameter group No. 08)

Title	Communication Number	Function	Adjustable range	Default value
F800	0800	Communication speed	0 : 1200bps 1 : 2400bps 2 : 4800bps 3 : 9600bps	3
F801	0801	Parity	0 : NONE 1 : EVEN 2 : ODD	1
F802	0802	Inverter number	0 ~ 63	0
F803	0803	Communication error trip time (s)	0 (OFF), 1 ~ 100	0

Table 1 Input terminal selection table

Setting	Function	
0	Off	(No effect)
1	ST	(Gate ON/OFF)
2	F	(Foward run)
3	R	(Reverse run)
4	JOG	(JOG selection)
5	AD2	(AD2 selection)
6	SS1	(15 Pre-set speed selection)
7	SS2	(15 Pre-set speed selection)
8	SS3	(15 Pre-set speed selection)
9	SS4	(15 Pre-set speed selection)
10	RST	(Fault reset)
11	EMG	(Emergency stop)
12	PNL/TB	(Panel, Built-in potentiometer/Terminal mode selection)
13	DB	(DC injectgion braking ON/OFF)
14	PI	(PI control disable)
15	PWREN	(Parameter changing selection)
16	ST+RST	(ST-RST combination)
17	ST+PNL/TB	(ST-PNL/TB combination)
18	F+JOG	(F-JOG combination)
19	R+JOG	(R-JOG combination)
20	F+AD2	(F-AD2 combination)
21	R+AD2	(R-AD2 combination)
22	F+SS1	(F-SS1 combination)
23	R+SS1	(R-SS1 combination)
24	F+SS2	(F-SS2 combination)
25	R+SS2	(R-SS2 combination)
26	F+SS3	(F-SS3 combination)
27	R+SS3	(R-SS3 combination)
28	F+SS4	(F-SS4 combination)
29	R+SS4	(R-SS4 combination)
30	F+AD2+SS1	(F-AD2-SS1 combination)
31	R+AD2+SS1	(R-AD2-SS1 combination)
32	F+AD2+SS2	(F-AD2-SS2 combination)
33	R+AD2+SS2	(R-AD2-SS2 combination)
34	F+AD2+SS3	(F-AD2-SS3 combination)
35	R+AD2+SS3	(R-AD2-SS3 combination)
36	F+AD2+SS4	(F-AD2-SS4 combination)
37	R+AD2+SS4	(R-AD2-SS4 combination)
38	FCHG	(VIA, II/VIB mode selection)
39	THR2	(Motor overload protection level #2 selection)
40	THR2+AD2	(THR2-AD2 combination)
41	PNL_UP	(Panel frequency up)
42	PNL_DOWN	(Panel frequency down)
43	PNL_LL	(Panel frequency lower limit set)
44	PNL_LL+RST	(Panel_LL-RST combination) ※When the inverter tripped, only RST signal is action. (PNL_LL function does not work.)

Table 2 Output terminal selection table

Setting	Function	
0	LL	(Frequency lower limit)
1	LLN	(Opposite of LL)
2	UL	(Frequency upper limit)
3	ULN	(Opposite of UL)
4	LOW	(LOW speed signal)
5	LOWN	(Opposite of LOW)
6	RCH	(Acc/Dec complete)
7	RCHN	(Opposite of RCH)
8	RCHF	(Selected speed reach signal)
9	RCHFN	(Opposite of RCHF)
10	FL	(Fault signal)
11	FLN	(Opposite of FL)
12	CUR	(Over-current detection signal)
13	CURN	(Opposite of CUR)

Table 3 Default value table

Type Form	Voltage boost #1	Voltage boost #2	Slip frequency gain	Motor constant 1	Motor constant 2	Motor constant 3
	ub (%)	F172 (%)	F401	F402	F403	F404
VFS7S-2002	6.0	6.0	255	33	35	35
VFS7S-2004	6.0	6.0	255	33	35	35
VFS7S-2007	6.0	6.0	155	30	23	37
VFS7S-2015	6.0	6.0	107	25	15	40
VFS7S-2022	6.0	6.0	95	25	15	40
VFS7-2004	6.0	6.0	255	33	35	35
VFS7-2007	6.0	6.0	155	30	23	37
VFS7-2015	6.0	6.0	107	25	15	40
VFS7-2022	6.0	6.0	95	25	15	40
VFS7-2037	6.0	6.0	105	25	14	35
VFS7-2055	4.0	4.0	74	15	10	34
VFS7-2075	4.0	4.0	83	13	12	36
VFS7-2110	3.0	3.0	64	12	10	38
VFS7-2150	3.0	3.0	75	9	11	37
VFS7-4007	6.0	6.0	100	25	14	35
VFS7-4015	6.0	6.0	100	25	14	35
VFS7-4022	6.0	6.0	95	25	35	35
VFS7-4037	6.0	6.0	105	25	23	37
VFS7-4055	4.0	4.0	68	15	10	39
VFS7-4075	4.0	4.0	83	13	12	37
VFS7-4110	3.0	3.0	64	12	10	39
VFS7-4150	3.0	3.0	75	9	11	37

MAINTENANCE AND INSPECTION

Carry out preventive maintenance in order to ensure trouble-free use of the inverter for a long period of time.

Carry out periodical inspection once every three to six months, depending on the operating conditions. Before starting inspection, be sure to turn off the power switch (MCCB) and make sure that the CHARGE lamp is off. (Wait for atleast ten minutes.)

[Inspection Points]

1. Check if any wire terminal screws are loose. If loose screws are found, tighten them with a screwdriver.
2. Check visually if any terminals are improperly crimped or have traces of overheat.
3. Check the wires and cables visually for damage.
4. Remove dust with an electric vacuum cleaner. Clean the vent holes and PCBs with great care. Dust or foreign matter may cause unexpected defects or troubles.
5. If the inverter is not used for a long time, supply power once every two years and check that it works properly. Disconnect the motor and supply electric power for at least five hours.
   Commercial electric power should be supplied to the inverter via aVariac, etc. and the voltage should be increased gradually. Power should not be applied directly to the inverter.
6. If an insulation test is needed, conduct it on the main circuit terminal block only using a 500 V megger. Never use any other terminals or the control circuit terminal of a PCB for an insulation test. If an insulation test of the motor needs to be performed, disconnect the wires from the output terminals U, V and W, and perform an insulation test of the motor alone.
7. Do not carry out a Hi-pot test, which could break the internal parts. Carry out inspection periodically and ensure that a good environment is maintained.
8. Checking voltage and temperature
   The input voltage and output voltage should be measured frequently using a tester to detect failures. Record the readings daily, taking account of the characteristics of the tester or voltmeter used.
   [Recommended voltmeter]
   Input: Moving iron type voltmeter ( )
   Output: Rectifying voltmeter ( )
   To detect failures more easily, the ambient temperature around the inverter should be measured frequently when starting operation, during operation and when the machine is stopped.

STORAGE AND WARRANTY

Consumables

The inverter contains many semiconductors and electronic parts. The performance of the parts shown below will deteriorate over time, resulting in deterioration of the inverter or failures. Therefore, the inverter should be inspected for preventive maintenance.

1) Smoothing capacitors

   Ripple currents, etc. affect the aluminum electrolytic smoothing capacitors in the DC section of the main circuit and the capacitor performances will be degraded. The degree of such deterioration greatly depends on the ambient temperature and usage conditions. The capacitors need to be replaced about every five years if the inverter is used under normal environmental conditions.

   Appearance Inspection Criteria

   a) Whether electrolyte leaks

   b) Whether the safety valve is protruding or the capacitor has expanded

2) Cooling fan

   The service life of the cooling fan for cooling the parts that generate heat is approximately 15,000 hours (or approximately two years if the inverter is run continuously). If the fan generates abnormal noise or vibration, it should be replaced.

Storage

If the inverter is not used after purchase but it is to be stored temporarily or for a long time, follow the instructions below.

1. Do not store the inverter in a hot or humid place exposed to vibration or metallic powder. Store it in a well ventilated place.
2. If the inverter is not to be used for a long period of time, supply power to it once every two years to restore the characteristics of the smoothing capacitors. Check the functions of the inverter at the same time.

   Commercial electric power should be supplied to the inverter via a Variac, etc. and the voltage should be increased gradually. Power should not be supplied directly to the inverter. (Power should be supplied for at least five hours.)

   If the inverter is left turned off for a long period of time, the characteristics of the smoothing capacitors in the inverter will deteriorate.

Warranty

Toshiba warrants to the original purchaser that its product is free from defects for a period of one year from the date of purchase. Toshiba will, without charge, repair or replace or adjust, at its option, a defective product within the warranty period.

1. Toshiba will repair, without charge, a defective product if the trouble occurs within one year from the date of delivery provided the product has been installed and used properly and the trouble is clearly due to a defect in Toshiba's design or manufacturing.
2. The warranty period shall apply to the supplied product only.
3. Even during the warranty period, charges will be made for repair service in the following cases:

   1) Defects caused by misuse or abuse or unauthorized alterations or repairs

   2) Defects caused by dropping the product or accidents or damage during transportation after purchase

   3) Defects caused by a fire, salt damage, gas damage, earthquake, storm and flood damage, lightning or other force majeure

   4) Defects if the inverter is used for unauthorized purposes other than as an inverter
4. If specific warranty conditions are specified, such conditions shall take priority.

☆ Please carry out frequent, careful maintenance and inspection.

CE COMPLIANCE

Abstract

In Europe, EMC directive is enforced starting 1st Jan. of 1996, and Low Voltage directive starting 1st Jan. of 1997. The display of CE mark that demonstrates that products imported to European Union conform to these directives is required. Inverter itself cannot function alone, but is designed as a component in order to control machines or equipment which includes that inverter installed in a cubicle. Therefore the conformance to EMC directive is not required on inverter itself. But since the object of the Low Voltage directive is equipment that is designed to be used with rated voltage of 50 to 1,000 VAC or 75 to 1,500 VDC, CE should be marked on inverter as to the Low Voltage directive.

But CE has to be marked on the final product installing inverters, that conforms to the EMC directive and the Low Voltage directive. And the product also may conform to Machine directive. The user that makes the final products have to take the responsibility for Marking of CE. For that reason, we recommend installation for Low Voltage directive and measurement for EMC directive, so that the products including our inverter should conform to the EMC and Low Voltage directive.

TOSHIBA carried out Approval testing and confirmation testing on representative models under the circumstances based on installation and measurement so that our products should conform to each directive. But we cannot confirm the conformance of the user's products to the EMC directive. Since EMC environment changes according to the construction of the cubicle and the relation of other installed electric equipment and the condition of wiring and installation, please confirm the conformance to the EMC directive for the final products on your side.

EMC directive

■ An inverter itself is not an object of CE marking.

A machine which consists of an inverter and a motor is an object of CE marking.

The EMC directive includes the emission seciton and the immunity section.

→ Emission: Emission of electromagnetic wave and electromagnetic interference

→ Immunity: Resistance to electromagnetic interference

[Normative standard]

Emission: EN50081-2

Immunity: EN50082-2

Table 1 Relative standard of EMC directive

Noise type	Test item	Applicable standards	Measurements
Emission	Conducted Emission	EN55011 Group 1 class A	0.15 to 30 MHz.
	Radiated Emission		30 to 1000 MHz Measure absolute values by Spectrum Analizer Measure by the 30 m method
Immunity	Electrostatic Discharge	EN61000-4-2	Aerial discharge 8 kV, contact discharge 6 kV
	Radiated Electromagnetic field	ENV50140/1994	80 to 1000 MHz 1kHz 80%AM demodulation 10 V/m 900 MHz ± 5MHz Keyed carrier 50% 10 V/m
	Electrical Fast Transient/Burst	EN61000-4-4	AC 2 kV (D) or 4 kV (C), DC 2 kV (D) or 4 kV (C) control 2 kV (C) signal 1 kV (C) 5/50 ns 5 kHz
	Surge Immunity	IEC1000-4-5	±2 kV across lines, ±4 kV across line and ground

Countermeasures for EMC directive

We shows the actual countermeasures for conformity to EMC directive as Figure 1, 2.

1) Please install the EMI filter to the input of the inverter. The recommended filters are shown in the following Table 2.
   Filter installed type ("L" is attached after capacity indication in type from. Ex. VFS7-4007UPL) does not require external EMI filter.
   Countermeasures except external EMI filter are same.

Table 2 VF-S7 series Recommended filter

Type Form	Filter Type
VFS7S-2002UP	FN2070M-6/16
VFS7S-2004UP	FN2070M-10/16
VFS7S-2007UP	FN2070M-12/16
VFS7S-2015UP	FN2070M-16/16
VFS7S-2022UP	FN2070M-16/16

Type Form	Filter Type
VFS7-2004UP	FN258-7/07
VFS7-2007UP	FN258-7/07
VFS7-2015UP	FN258-16/07
VFS7-2022UP	FN258-16/07

2) The main cables such as input to the EMI filter and output of the inverter and the signal cables should be shielded, then cable length should be wired as short as possible. The main input cable should be separated from the main output cable, and cables for control signal also should be separated from main cables, not wiring parallel and not bundling, cross the wires where necessary.
3) Install EMI filter and inverter on the same metal back plate. And further more the radiated noise can be reduced by installing in the cubicle made of metal. The metal back plate or the cubicle must be grounded absolutely, by using short thick wires, separated from the main cables.
4) Please separate input cable to EMI filter from output cable as much as possible.
5) Shielded cables should be grounded on the metal back plate in order to reduce the radiated noise from the other cables. It is an effective measure that shielded cables are grounded close to the inverter or/and operation panel or/and EMI filter (less than 10 cm). Installation of ferrite cores can effectively reduce the radiated noise further.
6) Installation of the zero-phase and/or the ferrite core on the metal back plate or the cubicle reactor can also effectively reduce the radiated noise further.

Note*)Filter installed type ("L" is attached after capacity indication in type from. Ex. VFS7-4007UPL) does not require external EMI filter. Countermeasures except external EMI filter are same.

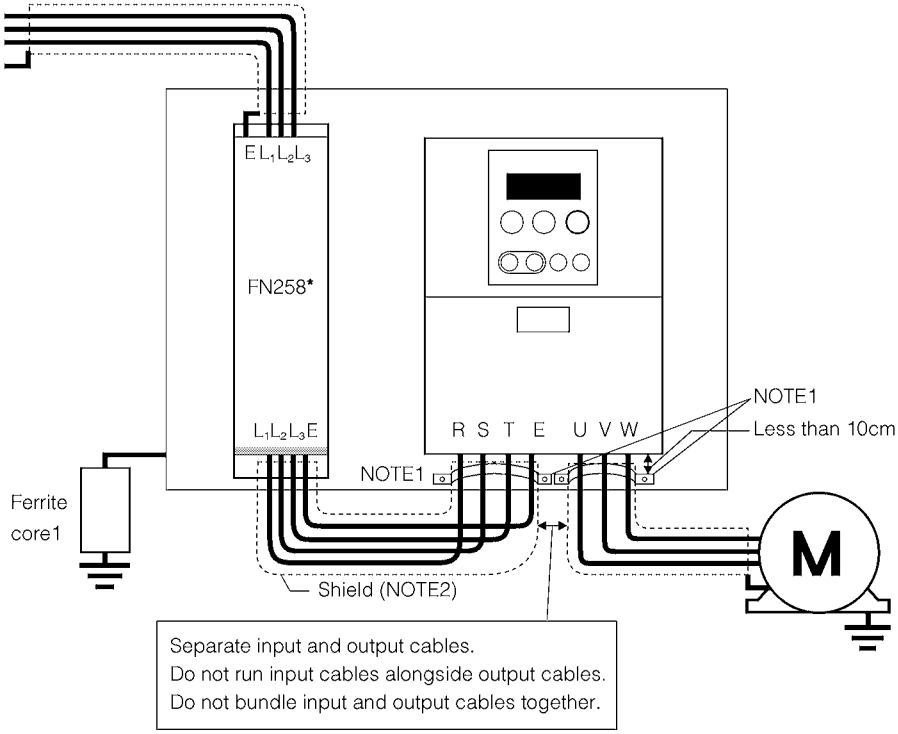

Figure 1 VF-S7 series-countermeasures for class A of group 1

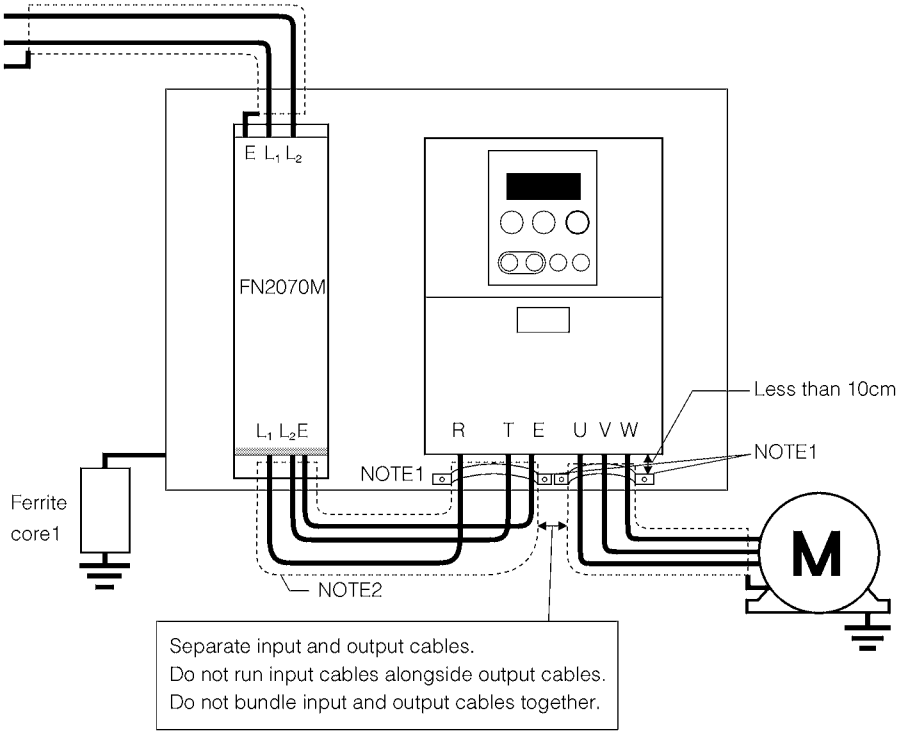

Figure 2 VF-S7S series-countermeasures for class A of group 1

NOTE1) Process as shown below.

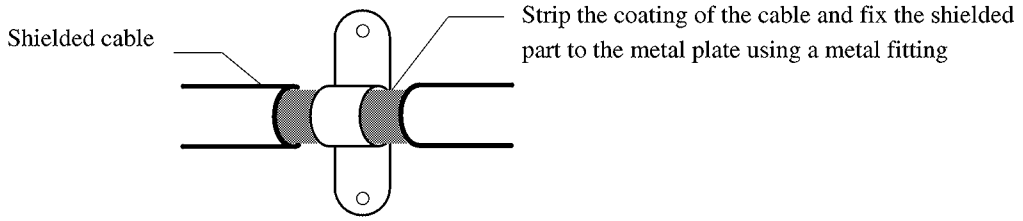

Figure 3

[Operating with external signals]

To operate with external signals, process as following figures.

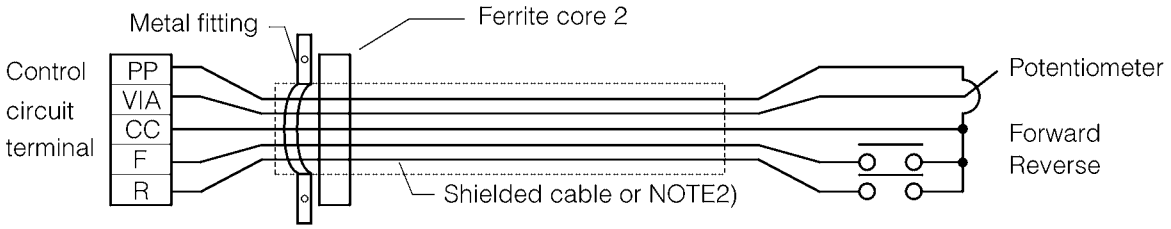

Figure 4

[Accessories]

- Zero-phase reactor: SOSHIN ELECTRONIC COMPONENT
  Type form/RC5078 or RC9129
- Ferrite core1: Chomerics
  Type form/HBFE-1004-AS
- Ferrite core2: NEOSID
  Type form/28-043-38
- NOTE2) Shield: SUMITOMO 3M
  Type form/DS-5, 7, 10, 14
- EMI filter: SCHAFFNER ELEKTRONIC AG
  Type form/FN2070M, FN258

Low Voltage directive

■ Inverter itself is an object of the CE marking.

The Low Voltage directive defines the safety of the electric equipment. VF-S7/S7S series is conformed to the Low Voltage directive based on prEN50178. Then CE is marked on the inverter.

Normative standard:	prEN50178 (a draft)/Electronic equipment for use in power installation		
Pollution degree:	2 (5. 2. 15. 2)		
Over-voltage category:	3	200 V class	3.0 mm (5. 2. 16. 1)
		400 V class	5.5 mm (5. 2. 16. 1)

prEN50178 provides that for electronic equipment used in power installations. The main intention is to stipulate minimum requirements for the design and manufacture of electronic equipment, for protection against electric shock, for testing and for the integration into systems for power installations.

Countermeasures for Low voltage directive

Please carry out the below mentioned countermeasures in case of using VF-S7/S7S as components of your products.

1) When the inverter is installed outside a cubicle wiring openings should be covered, so that it should prevent someone from touching live parts through the openings in case of a maintenance. (Refer to Figure 5)
2) No more than 1 cable should be connected to each ground terminal of the main terminal board. In this case, other cables for grounding should be grounded on the metal back plate or/and in the cubicle (Refer to Figure 6). The cross-sectional area of grounding cable shall be, in any case, not less than 3.5 mm^2.
3) A no-fuse breaker should be connected to the input side of the EMI filter.

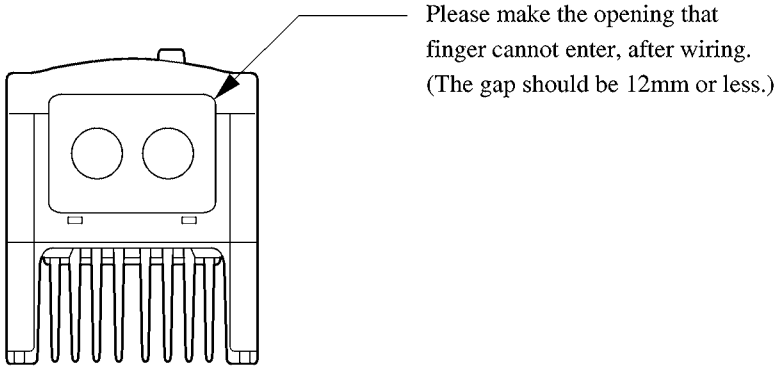

Figure 5 Wiring opening cover

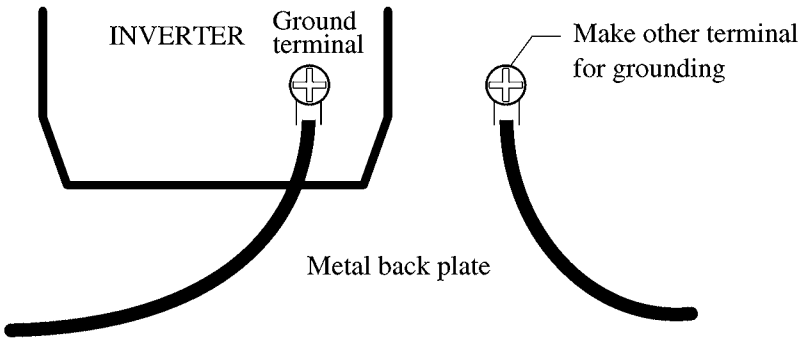

Figure 6 Grounding

N O T E

NOTE

N O T E

thanglongautomation.com - 0968.363.567

TOSHIBA

TOSHIBA INTERNATIONAL CORPORATION
INDUSTRIAL DIVISION
13131 West Little York Road
Houston, Texas 77041
U.S.A.
Tel: (800)231-1412
Fax: (713)466-8773
Telex: 762078
World wide web http:// www. tic. toshiba.com

TOSHIBA CORPORATION
INDUSTRIAL EQUIPMENT DEPARTMENT
1-1, SHIBAURA 1-CHOME, MINATO-KU, TOKYO,
105-8001 JAPAN
TELEX: J22587 TOSHIBA CABLE: TOSHIBA
TOKYO PHONE: 3-3457-4900

TOSHIBA INTERNATIONAL (EUROPE) LTD.
71-79 Station Road
West Drayton
Middlesex, UB7 7LT
England
Tel: 0189-542-7400
Fax: 0189-544-9403

TOSHIBA INTERNATIONAL CORP. PTY. LTD.
Unit 1, 9 Orion Road, Lane Cove
N.S.W. 2066
Australia
Tel: 02-428-2077
Fax: 02-427-7405

OVERSEAS OFFICE:
Mexico City, Caracas, Rio de Janeiro, Buenos Aires, London, Wien, Berlin, Hong Kong, Bangkok, Manila, Jakarta, Sydney, Wellington, Johannesburg, Beijing, Taipei, Guangzhou

- For further information, please contact your nearest Toshiba Liaison Representative or International Operations - Producer Goods.
- The data given in this brochure are subject to change without notice.

1999-11